1D-5

JFM 132 - 315 JUNIOR FULL VIEW MAST

CLIENT:- TEHNOMETAL

CLIENTS ORDER NO:- NG3

MAKERS ORDER NO:- 60/28

MAST SERIAL NO:- 2952

DATE OF DELIVERY:- JULY 1960

WOODFIELD

WOODFIELD ROCHESTER LIMITED

FRINDSBURY WORKS · ROCHESTER · KENT · ENGLAND

Telephone STROOD 78421 Telegrams: WOODFIELD · TELEX · ROCHESTER

DRILLING RIG IDECO WOODFIELD H-750 ID5

NIS-Naftagas
Narodnog fronta 12, 21000 Novi Sad
Serbia
Phone: +381 21 481-2113
Fax: +381 21 481-4345
www.nis-naftagas.rs
e-mail:
dragan.zivkovic@nis-naftagas.rs

Drilling depth
2450m with 5” D.P.
Substructure
BOX
Floor height: 10.5 ft (3.2m)
Mast
J.F.M 132-315
Crown block
CB-300-5-36, 4 x 36” + 1 x 36”
Drawworks
IDECO WOODFIELD H-750, 2 x 3412 CAT, chain drive
Rotary table
HS-175, chain drive
Travelling block and hook
TBA-300-4-36
Swivel
Continental Emsco LB-300
Power system and power generation
CAT 455 kVA, CAT 320 kVA
MCC 400/231V, 50Hz, 800A
Mud system
Mud pumps: GEHO TMP-800, powered by CAT 3512
Drillmec 7TS600, powered by CAT 3508
Mud tanks: 4+1, total volume 144m^3 with two (three) agitators per tank
Shale shaker: 2 MI SWACO PT MUNGOOS
Degasser: DOMESTIC

THIRD ANGLE PROJECTION

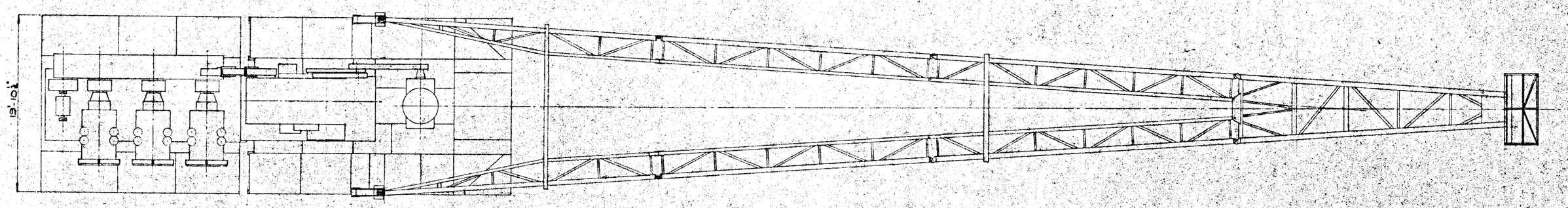

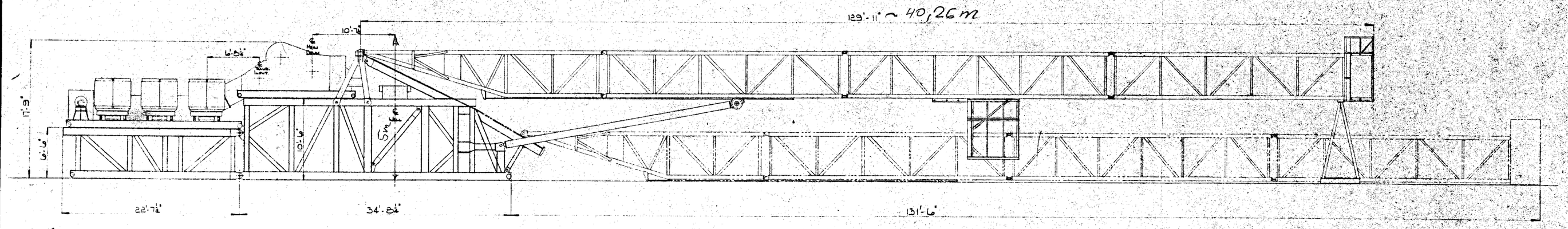

REV. No.	DESCRIPTION	INITIAL	DATE

TOLERANCES
CASTING ± 1/8"
FABRICATING ± 1/8"
MACHINING ± 1/64"
UNLESS OTHERWISE STATED

This drawing is the property of Woodfield Rochester Limited and is the copyright of same. It may not be reproduced or copied in whole or in part without their consent. All information is confidential and shall be treated as such. It must not be used for any purpose for which the drawing is not intended.

WOODFIELD ROCHESTER LIMITED
FRINDSBURY WORKS · ROCHESTER · KENT

THE LAYOUT OF 132' FULL VIEW MAST WITH H-750 DRAWWORKS.

FIRST USED ON W/O No. 6028

DRAWN	CHECKED	TRACED	CHECKED	SCALE
25.10.60				

DWG. No. E-5766-A.

THIRD ANGLE PROJECTION

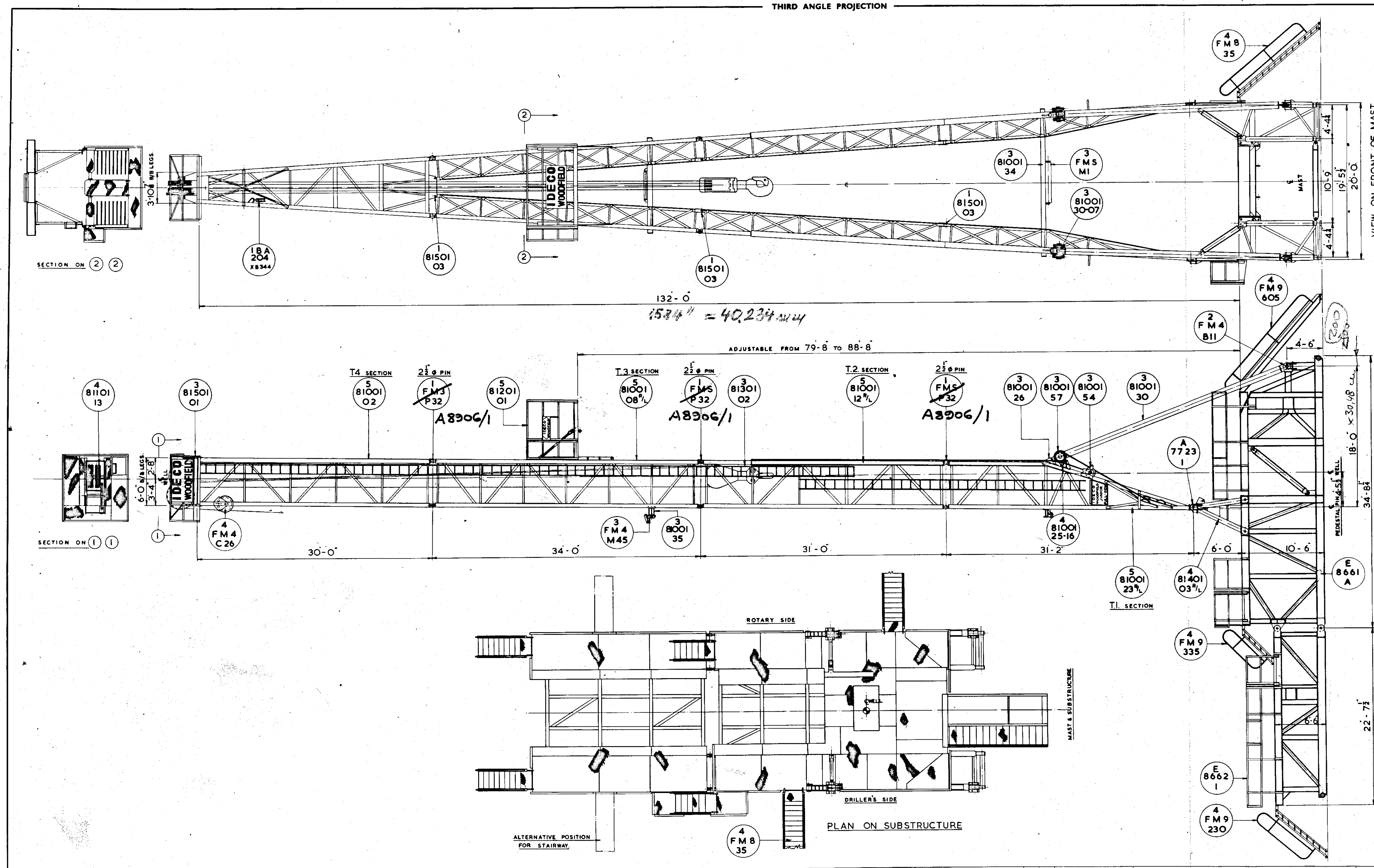

LIST OF REFERENCE DRAWINGS	
DRG. No.	TITLE
5-81001-02	MAST T4 SECTION
5-81001-08R/L	MAST T3 SECTION (RIGHT & LEFT)
5-81001-12R/L	MAST T2 SECTION (RIGHT & LEFT)
5-81001-23R/L	MAST T1 SECTION (RIGHT & LEFT)
4-81001-25-16	PIN
3-81001-30	RAISING LEG.
3-81001-30-07	PIN
3-81001-34	LOWER BACK STRUT
3-81001-35	UPPER BACK STRUT
3-81001-54	IDLER SHEAVE ASSEMBLY
3-81001-57	RAISING LEG SHOE ASSEMBLY
4-81101-13	CROWN BLOCK ASSEMBLY
5-81201-01	RACKING PLATFORM ASSEMBLY
3-81301-02R/L	MAST LADDER ASSEMBLY
4-81401-03	PEDESTAL (RIGHT & LEFT)
3-81501-01	CROWS NEST ASSEMBLY
1-81501-03	2"ø SPLICING PIN
4.F.M.4.C-26	CORELINE SHEAVE
3.F.M-4 M45	ROLLER ASSEMBLY
3.F.M. 5-M1.	ROLLER ASSEMBLY
2.F.M. 4-B11.	RAISING LEG PIN
4.F.M. 8-35	8'-6"-11'-0" ADJUSTABLE STAIRWAY
4.F.M. 9-230	5'-0"-7'-0" ADJUSTABLE STAIRWAY
4.F.M. 9-335	3'-0"-5'-0" ADJUSTABLE STAIRWAY
4.F.M. 9-605	COMBINED PIPERAMP & STAIRWAY
A-7723/1	MAST HINGE PIN
E-8661/A	ERECTION DRG. SUBSTRUCTURE & ENGINE BOXES
E-8662/1	INSTALLATION OF FLOORPLATES & HANDRAILS.

1' = 12"
53,5 2,44 m

NOTE :-

FOR SLING LINE REEVING DIAGRAM SEE DRG. No. D. 8768/1

FOR DRILLING LINE REEVING DIAGRAM SEE DRG. No. 2-81001-44

WOODFIELD

WOODFIELD ROCHESTER LIMITED

FRINDSBURY WORKS · ROCHESTER · KENT

TITLE: ASSEMBLY OF 132'-0" JUNIOR FULL VIEW MAST.

FIRST USED ON W/O No.		60/28		
DRAWN	CHECKED	TRACED	CHECKED	SCALE
A.A.B. 16/2/60		P.A.C. 19/5/60	H.P.A. 26/5/60	

DRG. No. E-8775/A. REVISION No.

THIRD ANGLE PROJECTION

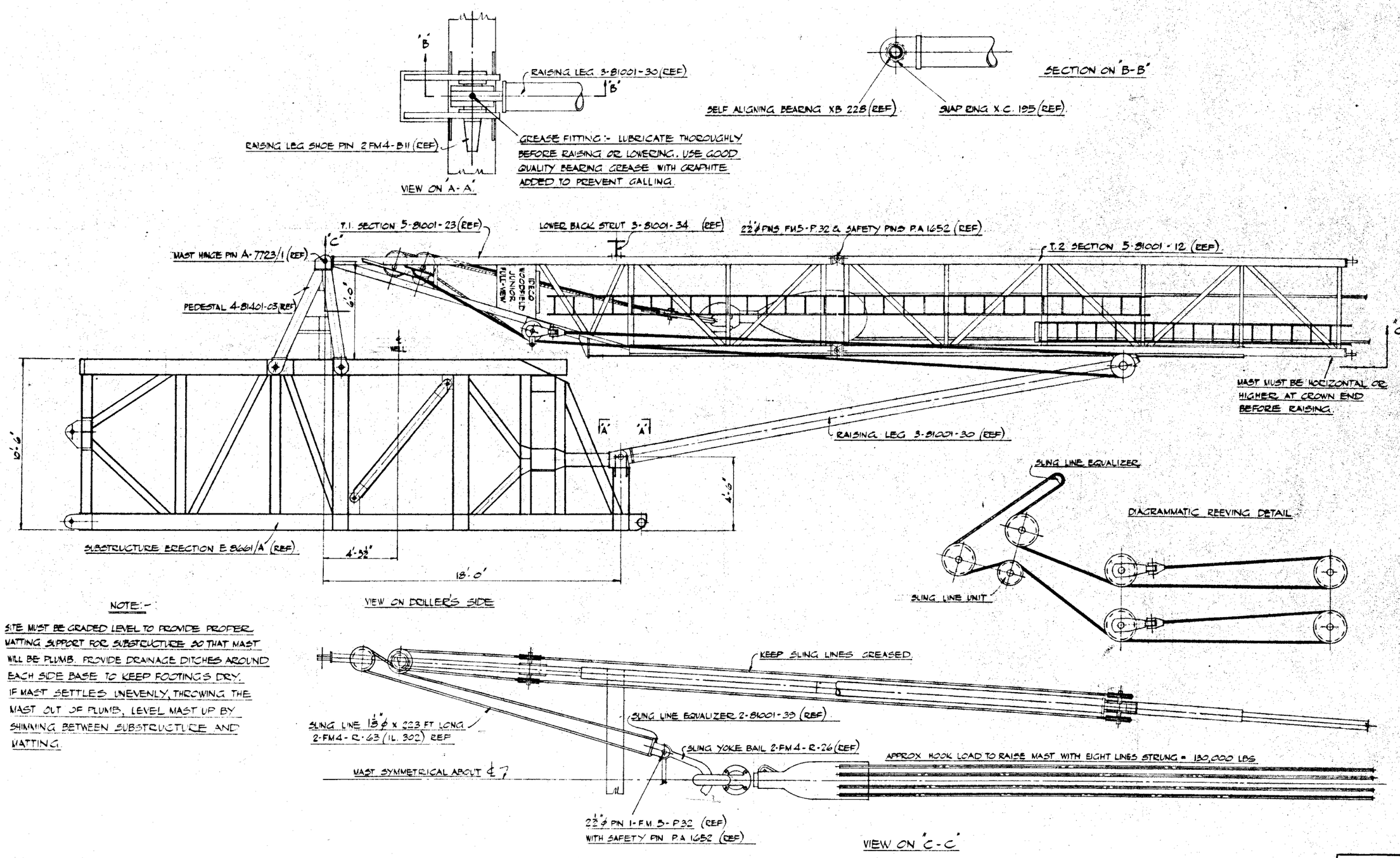

NOTE:-

SITE MUST BE GRADED LEVEL TO PROVIDE PROPER MATTING SUPPORT FOR SUBSTRUCTURE SO THAT MAST WILL BE PLUMB. PROVIDE DRAINAGE DITCHES AROUND EACH SIDE BASE TO KEEP FOOTINGS DRY. IF MAST SETTLES UNEVENLY, THROWING THE MAST OUT OF PLUMB, LEVEL MAST UP BY SHIMMING BETWEEN SUBSTRUCTURE AND MATTING.

TOLERANCES
CASTINGS ± ¼"
FABRICATING ± ⅛"
MACHINING ± 1/64
UNLESS OTHERWISE STATED

This drawing is the property of Woodfield of Rochester Limited and is the subject of copyright protection and other intellectual property rights in Europe and is responsible as deemed. All information contained herein shall be treated as confidential and shall not be used except for the purpose for which the drawing is issued.

REV No.	DESCRIPTION	INITIAL	DATE

WOODFIELD ROCHESTER LIMITED
FRINDSBURY WORKS · ROCHESTER · KENT

TITLE
SLING LINE REEVING
132' FULL VIEW MAST

FIRST USED ON W/O No. 60/28				
DRAWN	CHECKED	TRACED	CHECKED	SCALE
27/1/60				5
DRG. No. D-8768/1				REVISION No.

Rig Data

No.	Item	
1.	Rig Manufacturer	Ideco Woodfield (Dresser Industries, Beaumont TX)
2.	Year of manufacture	1960
3.	Rig Owner	NIS Naftagas OFS – Oil industry of Serbia
4.	Date of Delivery	July 1960
5.	Makers order No.	60/28
6.	Manufacturer	Woodfield Rochester Ltd
7.	Manufacturer plant	Frindsbury Works Rochester, Kent

Equipment data

No.	Item	Ser no.	Note/ Drg. No.
	Junior Full View mast JFM 132-315	2952	Assembly E.8775/A
	Mast full height	132’ 0”	
	Mast load capacity	315000 lbs	API 4F
	Leg opening	19’ 5 ½”	
	Drilling line	1 1/8” 6x19 IWRC RL	API 4A
	Mast rising line	1 1/8”	API 4A
	Mast Specification		API 4F
	Mast T4 section	5-81001-02	Top section with crown
	Mast T3 section (left & right)	5-81001-08	Upper mid-section
	Mast T2 section (left & right)	5-81001-12	Mid-section
	Mast T1 section (left & right)	5-81001-23	Lower section
	Raising leg	3-81001-30	Left & right
	Crown Block assembly	4-81101-13	
	Racking platform	5-81201-01	
	Raising leg shoe assembly	3-81001-57	
	Upper back strut	3-81001-35	
	Lower back strut	3-81001-34	
	Idler sheave assembly	3-81001-54	

1D-5

JFM 132 - 315 JUNIOR FULL VIEW MAST

CLIENT:- TEHNOMETAL

CLIENTS ORDER NO:- NG3

MAKERS ORDER NO:- 60/28

MAST SERIAL NO:- 2952

DATE OF DELIVERY:- JULY 1960

WOODFIELD

WOODFIELD ROCHESTER LIMITED

FRINDSBURY WORKS · ROCHESTER · KENT · ENGLAND

Telephone STROOD 78421 Telegrams: WOODFIELD · TELEX · ROCHESTER

INDEX FOR IDECO WOODFIELD

132-315 JUNIOR FULL VIEW MAST

SPECIFICATION

Assembly of Junior Full View Mast	E.8775/A

SERVICE INFORMATION

Recommended operational instructions for mast	
Layout of mast with drawworks	E.8766/A
Erection drawing of substructure and engine boxes	E.8661/A
Sling line reeving diagram	D.8768/1
Mast reeving diagram	2-81001-44
Erection of mast ladders	3-81301-02
Transport diagram	3-81001-51
Lubrication instructions	
Lubrication chart	3-81001-43
Field welding instructions	3-P129

PARTS LIST

PARTS DRAWINGS

Mast headrest	3-P116
Fast line guide roller	3-81001-49
Idler sheave	3-81001-54
Raising leg shoe	3-81001-57
Mast raising sheaves	2-81001-59
Locking mechanism	2-81001-61
Crown block	4-81101-13
Racking platform	5-81201-01
Crows nest	3-81501-01
Line spooler kit	4-81501-09
Tong counterweight	3-81501-16
Mast guide ramp	3-81901-06

RECOMMENDED PROCEDURE FOR ERECTION, RAISING AND LOWERING IDECO-WOODFIELD JUNIOR FULL VIEW MAST

ERECTION:-

The site must be graded level to provide proper matting support to locate the substructure.

Adequate water drainage must be provided around each side base to keep the footings dry. If the substructure and mast settles unevenly thus throwing the mast out of plumb, re-align by shimming between the substructure and mats.

1. Fit mast guide ramps onto the substructure.

2. Place the travelling block and hook as close as possible to front substructure spreader beam to facilitate later attachment of sling line bail to hook.

3. Anchor the hook to the substructure with a wire sling.

4. Assemble the mast on timber matting. The foot rollers on the T1 sections should rest in the guide ramp tracks. The centre line of the mast at the crown must be placed as near as possible on the centre line of the substructure.

5. Reeve up the blocks as shown in the reeving diagram.

6. Elevate the crown end of the mast and rest the water on the truck bolster or float trailer. Ensure that the mast raising legs are securely chained to the mast.

7. Pull mast slowly up the ramps by spooling in the fast line.

8. Insert the mast hinge pins into pedestal slots.

9. Remove the mast guide ramps from the substructure.

10. Lower the raising legs into the raising leg base pedestal of the substructure.

11. Place the mast head rest in position underneath the water table and remove the mast from the truck bolster or float trailer.

12. Install the racking platform at the required position.

13. Ensure that the access gate to the B.O.P., control side, is pinned in position.

CAUTION:

(A) On extra high substructures, watch for interference of the under side of the mast with the guide ramp tracks. It may be necessary to increase the elevation of the crown end of the mast.

(B) If both the foot rollers are not central over the pedestal slots at the end of the travel, the crown end of the mast must be shifted laterally. Do not attempt to pull mast into alignment with the drawworks.

MAST RAISING INSTRUCTIONS

1. Mast must be in a level position or above when supported on headrest.
2. Make final visual inspection of mast, checking carefully the following:
   - A. Raising line string up. Make sure all lines are in raising sheave grooves and clear.
   - B. Condition of raising sheaves and sling lines.
   - C. Deadline anchor connection.
   - D. Check raising leg, and mast pedestal connections to substructure.
   - E. Back struts bolted in place.
   - F. Racking platform properly attached.
   - H. Make an inspection of the (2) locking lugs (both sides) to see if they are free and in extended position.
   - I. Be sure locking pin is inserted in hole provided below bottom end of raising track.
3. Be sure a minimum of 400 feet of line is spooled on Attach hook to sling bail.
4. Lubricate all bearing points in mast. Lubricate mast pedestal and raising leg pins.
5. To prevent traveling block from fouling, swing center board, on racking platform,over and tie down.
6. Make sure weight indicator is working properly.
7. Place hoist drum in lowest speed and slowly increase pull on lines. If 132' mast does not start up with hook load of 140,000 to 160,000 lbs., of 150,000 to 170,000 for 98'. Recheck weight indicator and rigging. Since the locking lugs operate automatically, do not pull on lock release lines during raising operation.
8. Raise mast slowly into vertical position.
   - A. Proceed slowly as raising leg shoes approach locking lugs and stop as soon as both locking lugs swing out into extended position.
9. After mast is in vertical position and both locking lugs

have opened, slack off on the hook slowly which will seat the raising leg shoe against the locking lugs.

10. Drive the locking pins in place.
11. When lowering block, watch drum to make sure enough line is spooled on the drum to lower hook to floor.
12. Store raising slings in mast by pulling up full length with catline and lashing to mast.

MAST LOWERING INSTRUCTIONS

1. Lubricate all bearing points in mast.
2. Attach raising lines to yoke and connect to hook. Check to eliminate kinks in the raising lines.
3. Check condition of raising sheaves and slings.
4. Check raising leg, and mast pedestal connections to substructures.
5. To prevent traveling block from fouling, swing center board on racking platform over and tie down.
6. Be sure weight indicator is working properly.
7. Drive out the locking pins.
8. Take up on the lines slowly until locking lugs can be retracted on both sides by pulling on lock release lines. Do not release locking lugs until raising shoes pass the locking lugs.
9. Lower mast slowly to headrest.

CAUTION: NO NOT EXCEED 30,000 LBS HOOK PULL WHEN PULLING ON SLING LINES WITH MAST IN DRILLING POSITION

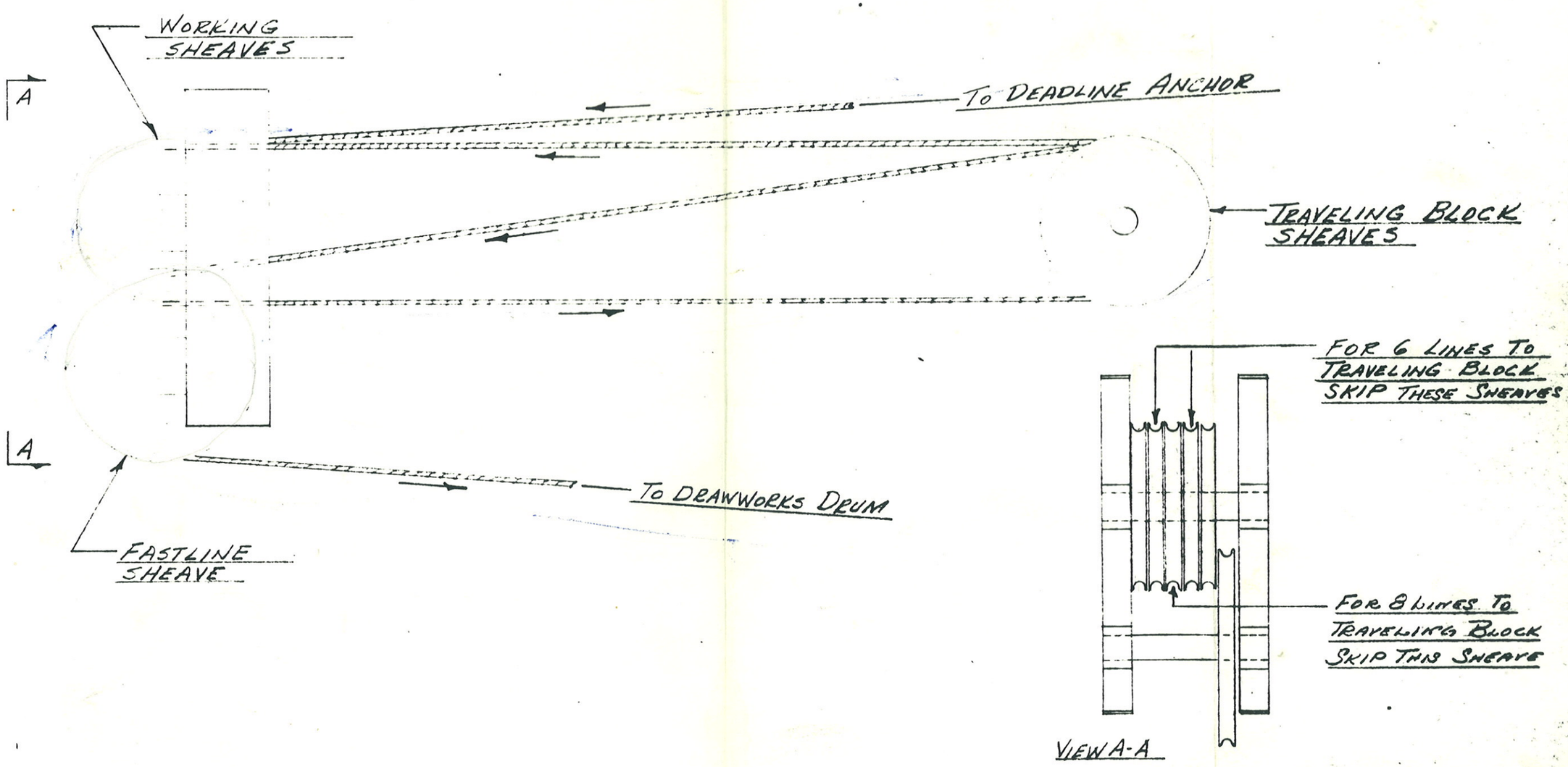

CROWN BLOCK

ISIONS

OLERANCES
TING ± 1/8
MINING
CTIONAL ± 1/64
ECIMAL ± .005
ESS OTHERWISE NOTED

FINISH
125
SYMBOL TOUCHES SURFACE TO BE FINISHED
NUMBER — MICROINCH ROUGHNESS
MICROINCH ROUGHNESS IN ACCORDANCE WITH A. S. A. STANDARDS
SEE SHOP STANDARDS

This drawing, including all novel and patented or patentable subject matter, embodies confidential information of the Dresser Equipment Company - Ideco Division and is loaned with the understanding that it will not be reproduced nor be used for any purpose except that for which loaned unless written permission is granted by the owner, and that it shall be returned on demand.

IDECO

DRESSER EQUIPMENT CO. - IDECO DIVISION
PLANT: BEAUMONT, TEXAS
HEADQUARTERS: DALLAS 21, TEXAS

98 FT. AND 132 FT. FULL VIEW
MAST - REEVING DIAGRAM
DRILLING LINE - 6 LINES AND
8 LINES TO TRAVELING BLOCK

ORDER NO.			
	DRAWN	CHECKED	APPROVED
NAME	JMH	JSE	
DATE	2-6-57	11-20-57	
DRAWING NO.	2-81001-44		

CT1 REQD	PIECE MARK	DESCRIPTION
1	81301-01-01R	LADDER
1	81301-01-01L	-DO-
1	81301-01-02	-DO-
1	81301-01-03	-DO-
1	81301-01-04	-DO-
1	81301-01-05	-DO-
1	81301-01-06	-DO-
1	81301-01-07R	LANDING PLATFORM
1	81301-01-07L	-DO-
1	81301-01-08	-DO-
8	81301-01-26	J BOLTS
2		3/4"X1 1/2" GMB W/HN&LW.

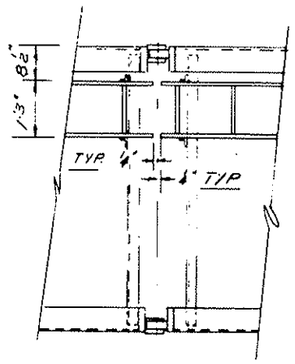

VIEW "C"

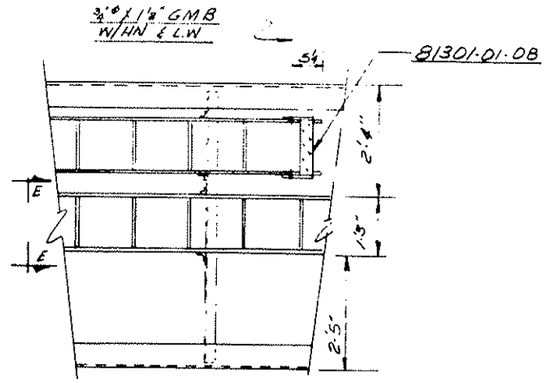

VIEW "B"

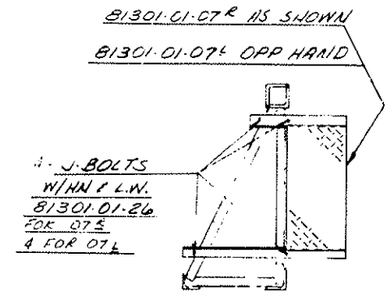

SECTION "D"

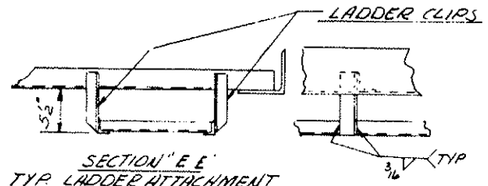

SECTION "E E"
TYP. LADDER ATTACHMENT
AT EACH GIRT

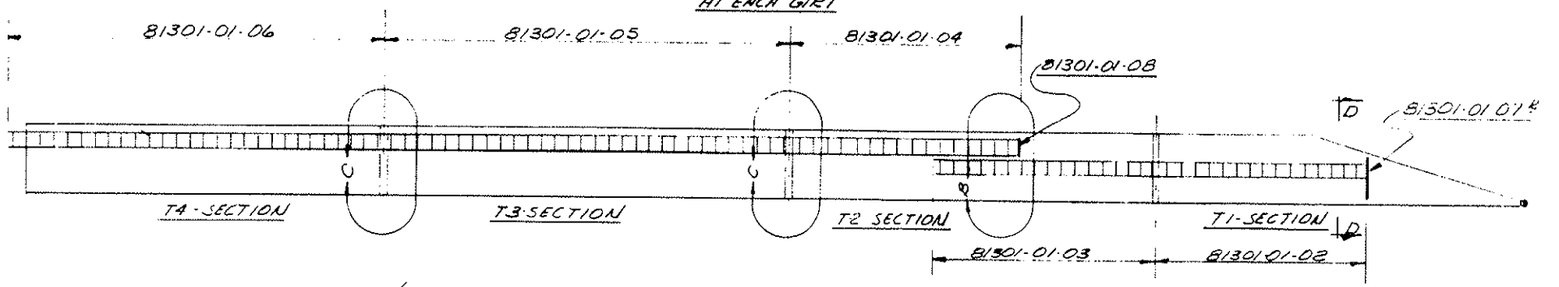

DRILLERS SIDE

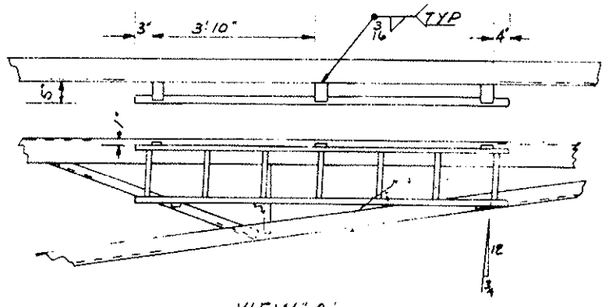

VIEW "A"

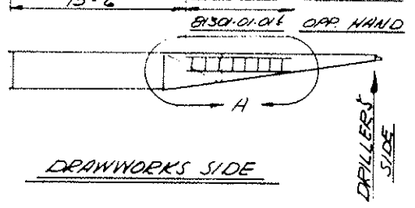

DRAWWORKS SIDE

(4)

NO.	DESCRIPTION	DW	CK
3	REDRAWN 5-5-58	TWL	

REVISIONS

MODEL NO. | FOR ASSEMBLY NO | NO. REQUIRED

NOTES:

TOLERANCES
CASTINGS ± 1/8
FABRICATING ± 1/8
MACHINING
FRACTIONAL ± 1/64
DECIMAL ± .005
UNLESS OTHERWISE NOTED

FINISH
125 SYMBOL TOUCHES SURFACE TO BE FINISHED
NUMBER = MICROINCH ROUGHNESS
MICROINCH ROUGHNESS IN ACCORDANCE WITH A. S. A. STANDARDS
SEE SHOP STANDARDS

This drawing, including all novel and patented or patentable subject matter, embodies confidential information of the Dresser Equipment Company - Ideco Division and is loaned with the understanding that it will not be reproduced nor be used for any purpose except that for which loaned unless written permission is granted by the owner, and that it shall be returned on demand.

IDECO

PLANT: BEAUMONT, TEXAS

HEADQUARTERS: DALLAS 21, TEXAS

ERECTION - MAST LADDERS
132' FULL VIEW MAST

ORDER NO.				
	DRAWN	CHECKED	APPROVED	SCALE
NAME	J.W.COX	[illegible]		NONE
DATE	5-5-58	5-7-58		
DRAWING NO.	3-81301-02			REVISION NO. III

CT1 REQ'D	PIECE MARK	DESCRIPTION
1	81301-01-01R	LADDER
1	81301-01-01L	-DO-
1	81301-01-02	-DO-
1	81301-01-03	-DO-
1	81301-01-04	-DO-
1	81301-01-05	-DO-
1	81301-01-06	-DO-
1	81301-01-07R	LANDING PLATFORM
1	81301-01-07L	-DO-
1	81301-01-08	-DO-
8	81301-01-26	J BOLTS
2		3/4"ø x 1 1/2" GMB W/HN & L.W.

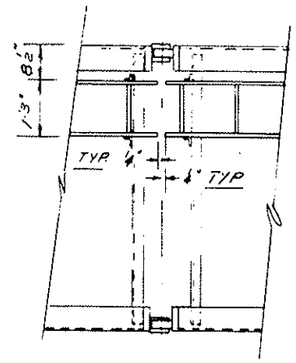

VIEW "C"

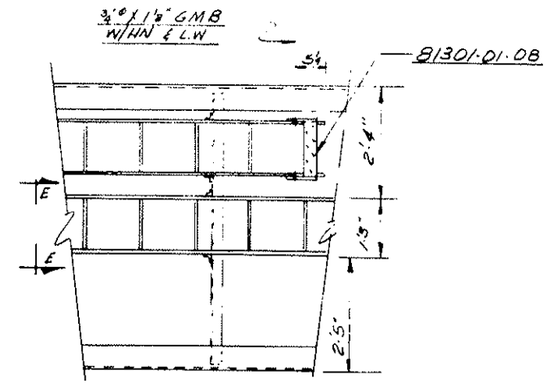

VIEW "B"

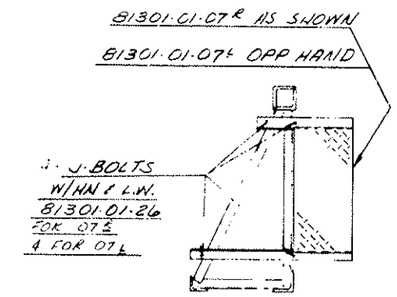

SECTION "D"

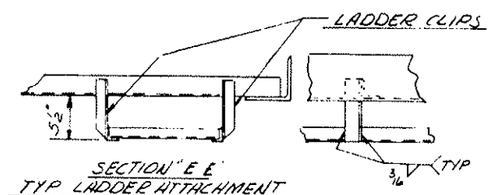

SECTION "E E"
TYP LADDER ATTACHMENT
AT EACH GIRT

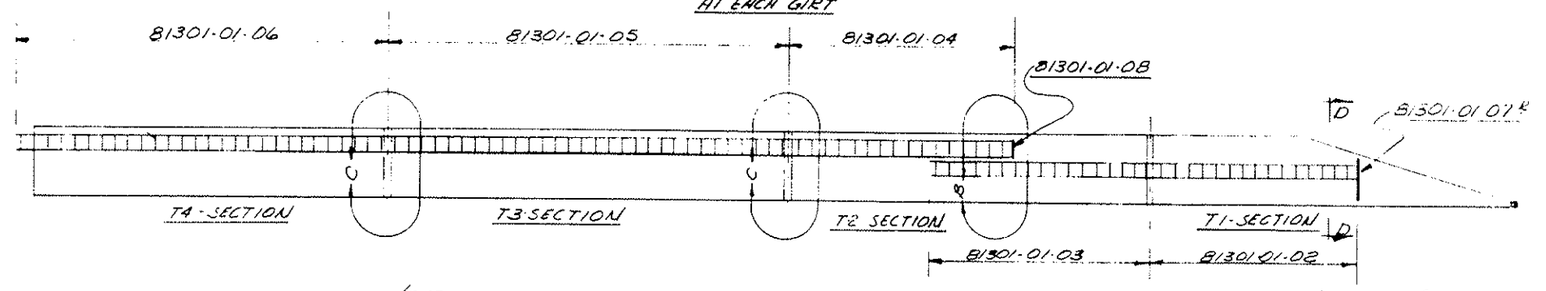

DRILLERS SIDE

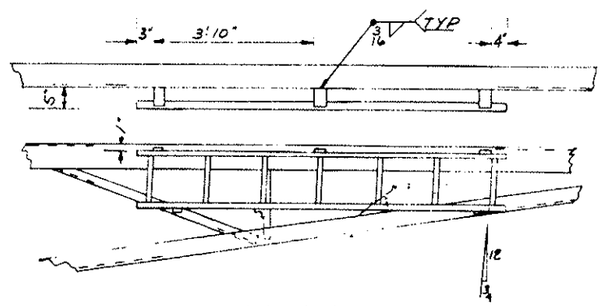

VIEW "A"

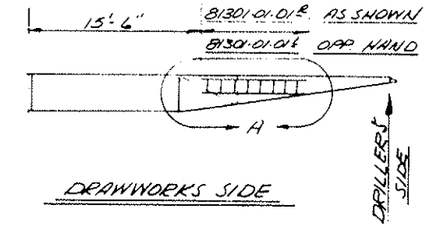

DRAWWORKS SIDE

NO	DESCRIPTION	DW	CK
3	AFE DRAWING 5-5-58	TWL	

REVISIONS

MODEL NO.	FOR ASSEMBLY NO	NO REQUIRED

NOTES:

TOLERANCES
CASTINGS ± 1/8
FABRICATING ± 1/8
MACHINING
FRACTIONAL ± 1/64
DECIMAL ± .005
UNLESS OTHERWISE NOTED

FINISH
125 SYMBOL TOUCHES SURFACE TO BE FINISHED
NUMBER = MICROINCH ROUGHNESS
MICROINCH ROUGHNESS IN ACCORDANCE WITH A. S. A. STANDARDS
SEE SHOP STANDARDS

This drawing, including all novel and patented or patentable subject matter, embodies confidential information of the Dresser Equipment Company - Ideco Division and is loaned with the understanding that it will not be reproduced nor be used for any purpose except that for which loaned unless written permission is granted by the owner, and that it shall be returned on demand.

IDECO

PLANT: BEAUMONT, TEXAS

HEADQUARTERS: DALLAS 21, TEXAS

ERECTION - MAST LADDERS
132' FULL VIEW MAST

ORDER NO.				
	DRAWN	CHECKED	APPROVED	SCALE
NAME	J.W. COX	[illegible]		NONE
DATE	5-5-58	5-7-58		
DRAWING NO.	3-81301-02			REVISION III

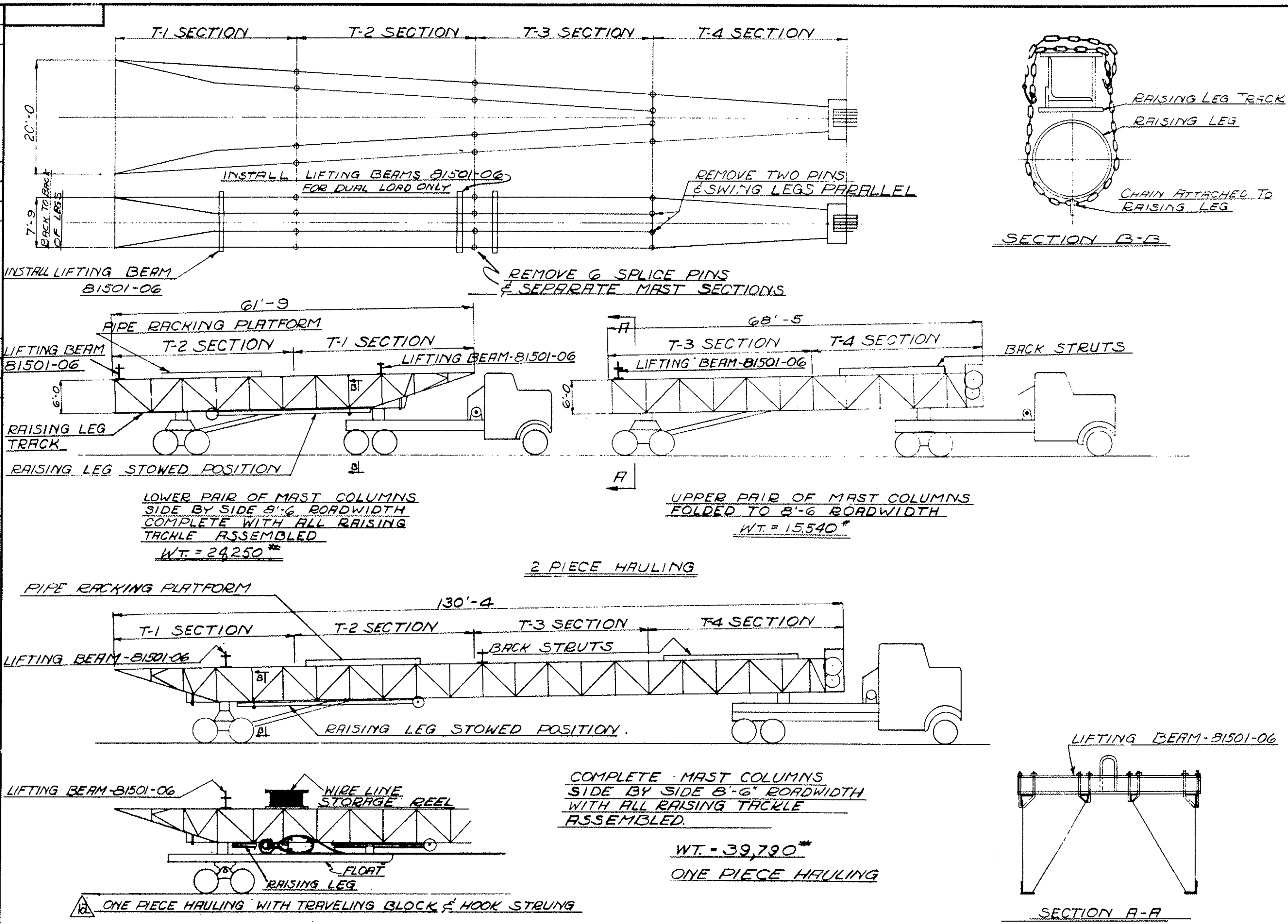

5

NO.	DESCRIPTION	DW.	CK.
1a	ADDED DIAGRAM 6-4-57	AB	
2	corrected wts. 4-23-58	JSE	

REVISIONS

MODEL NO. | FOR ASSEMBLY NO. | NO. REQUIRED

NOTES:

TOLERANCES
CASTINGS ± 1/8
FABRICATING ± 1/8
MACHINING
FRACTIONAL ± 1/64
DECIMAL ± .005
UNLESS OTHERWISE NOTED

FINISH
125 SYMBOL TOUCHES SURFACE TO BE FINISHED
NUMBER = MICROINCH ROUGHNESS
MICROINCH ROUGHNESS IN ACCORDANCE WITH A. S. A. STANDARDS
SEE SHOP STANDARDS

This drawing, including all novel and patented or patentable subject matter, embodies confidential information of the Dresser Equipment Company - Ideco Division and is loaned with the understanding that it will not be reproduced nor be used for any purpose except that for which loaned unless written permission is granted by the owner, and that it shall be returned on demand.

IDECO

DRESSER EQUIPMENT CO. - IDECO DIVISION

PLANT: BEAUMONT, TEXAS
HEADQUARTERS: DALLAS 21, TEXAS

TRANSPORT DIAGRAM FOR 132' FT. FULL VIEW MAST

ORDER NO.

	DRAWN	CHECKED	APPROVED	SCALE
NAME	[illegible]			
DATE	2-26-57			

DRAWING NO. 3-81001-51 REVISION NO II

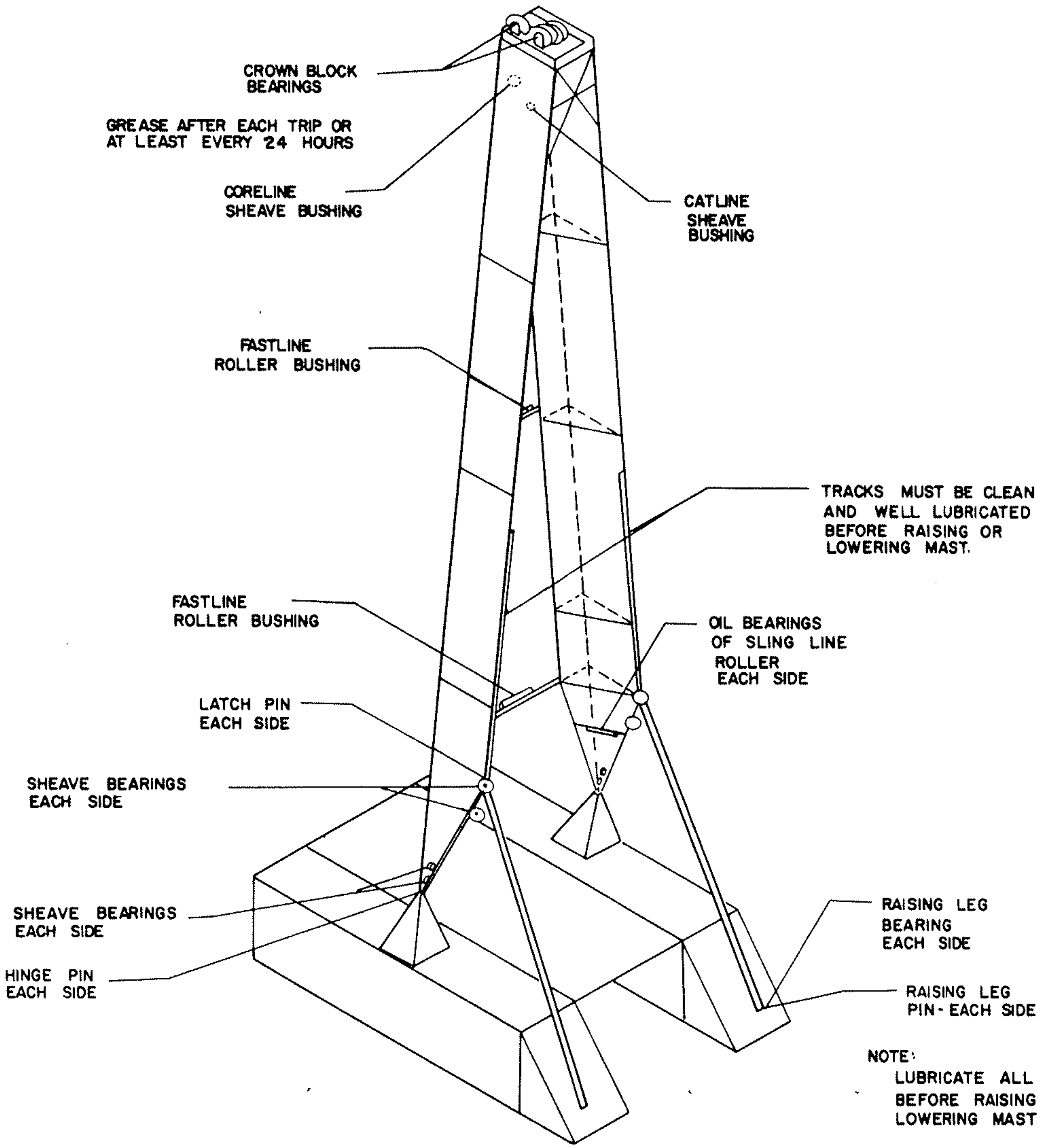

NOTE:
LUBRICATE ALL BEARINGS BEFORE RAISING OR LOWERING MAST

REVISIONS				
NO.	DESCRIPTION	DW.	CK.	

NO. REQUIRED	FOR ASSEMBLY NO	MODEL NO

NOTES:

TOLERANCES
CASTINGS ± 1/8
FABRICATING ± 1/8
MACHINING
FRACTIONAL ± 1/64
DECIMAL ± .005
UNLESS OTHERWISE NOTED

FINISH
125 SYMBOL TOUCHES SURFACE TO BE FINISHED
NUMBER = MICROINCH ROUGHNESS
MICROINCH ROUGHNESS IN ACCORDANCE WITH A. S. A. STANDARDS
SEE SHOP STANDARDS

This drawing, including all novel and patented or patentable subject matter, embodies confidential information of the Dresser Equipment Company - Ideco Division and is loaned with the understanding that it will not be reproduced nor be used for any purpose except that for which loaned unless written permission is granted by the owner, and that it shall be returned on demand.

IDECO
DRESSER EQUIPMENT CO. - IDECO DIVISION

PLANT: BEAUMONT, TEXAS
HEADQUARTERS: DALLAS 21, TEXAS

LUBRICATION CHART

ORDER NO				
	DRAWN	CHECKED	APPROVED	SCALE
NAME	COX	JMH		
DATE	3-1-57	3-4-57		
DRAWING NO.	3- 81001-43			REVISION NO

(6)

K+E ALBANENE 196L TRACING PAPER 10888

Piece No.	No	Shipping Mark	Description
-1	2	81901-08	Upper Guide Ramp
-2	2	81901-09	Lower Guide Ramp
-3	1	81901-10	Support
-4	1	81901-10	Support
	8		1" ϕ X 3¼ Lg Galv Mach Bolts
	8		1" Beveled Washers
	16		1" ϕ x 2¾ Lg. Galv. Mach Bolts w/Hex Nuts & Lw.
	6	IP 316	2" ϕ Pin
	6	IP 313	½" Safety Pin
		81901-07	Guide Ramp Conn. Plate Installation

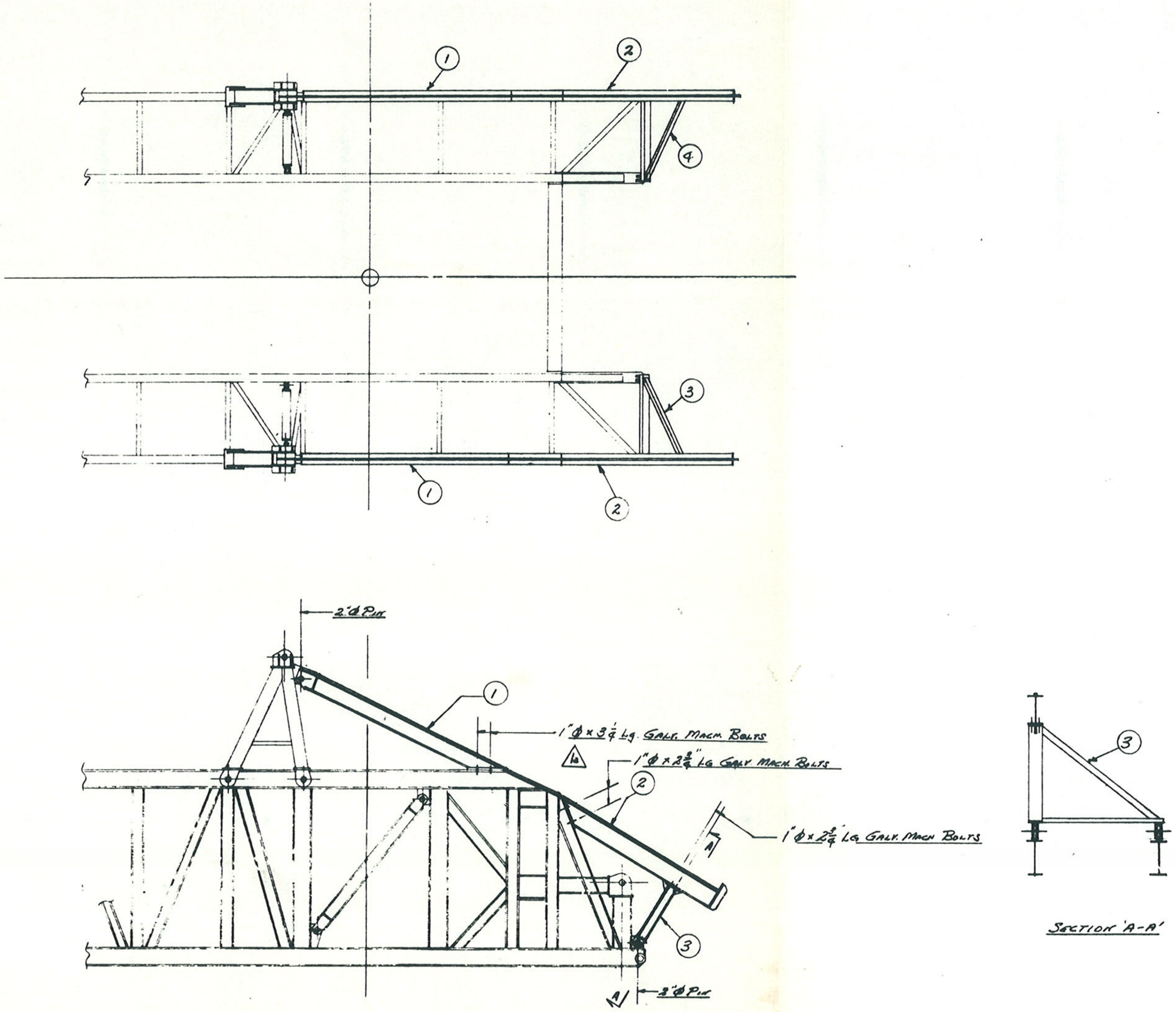

REVISIONS

No.	Description	Dw.	Ck.
1/2	Revised Guide Ramps 4-16-58	J.W.C.	

NOTES:

TOLERANCES: CASTINGS ± 1/8, FABRICATING, MACHINING FRACTIONAL ± 1/64, DECIMAL ± .005 UNLESS OTHERWISE NOTED

FINISH: 125 SYMBOL TOUCHES SURFACE TO BE FINISHED. NUMBER = MICROINCH ROUGHNESS. MICROINCH ROUGHNESS IN ACCORDANCE WITH A. S. A. STANDARDS. SEE SHOP STANDARDS

This drawing, including all novel and patented or patentable subject matter, embodies confidential information of the Dresser Equipment Company - Ideco Division and is loaned with the understanding that it will not be reproduced nor be used for any purpose except that for which loaned unless written permission is granted by the owner, and that it shall be returned on demand.

IDECO · DI

PLANT: BEAUMONT, TEXAS

HEADQUARTERS: DALLAS 21, TEXAS

Guide Ramps For Substructure
#81601-63

ORDER NO.				
	DRAWN	CHECKED	APPROVED	SCALE
NAME	G.H.C.	ACK	WKT	¾"=1'-0"
DATE	3-25-58	3-25-58	3-25-58	

DRAWING NO. 3-81901 06 — 1

RECOMMENDED PROCEDURE — FIELD WELDING AND HEATING

Welding Mast Main Legs:

Low Carbon weldable alloy steel is used in the mast main legs. The low carbon alloy steel can be welded without heat treatment at ordinary or moderate temperatures. At winter temperatures below 40°F, this steel, as well as mild steel, should be first heated to around 200°F or just hot enough that you can't keep your hand on it.

"Fleetweld 85" (Lincoln Electric Company) is the electrode we recommend for field welding the low carbon alloy steel. If this rod is not available, "Fleetweld 5" is an acceptable substitute possessing somewhat lower tensile strength.

Electrode material must be kept dry up to the time of actual use. Moisture in the coating may result in undesirable porosity and brittleness.

Another precaution to observe in field welding is to burn off the paint before welding to eliminate impurities.

Welding Substructure and Mast Girts and Braces:

The mast substructure, extension, floor plate, hand rails, mast girts, braces, all back struts, water table and raising legs are made of mild steel and can be welded with any good rod.

Heating:

Our mast steels can be heated for reworking without danger of impairing its strength properties. When steel must be bent or worked into a specified shape, it must be heated to a temperature where it is plastic enough to yield to this shaping or forging operation or the steel will be left in an unnatural strain. Hence, it is logical that if steel has been bent appreciably, it should be heated properly when straightened.

The proper heat for rework operations is a healthy blood red when viewed in medium daylight. This is about 1300-1500°F. Steel is permanently injured or "burned" when it is heated to a light yellow or white heat, where sparks are emitted and globules of metal can be seen.

The reworked steel should be allowed to cool naturally in still air, the same as it did at the mill after the rolling operation.

Reinforcement Of Damaged Angles In Mast:

If a member is cracked or bent, it may require reinforcing. This can be accomplished by welding a mild steel plate, formed if necessary, bridging the damaged area. Avoid continuous welds straight across (90° to axis) the damaged wherever possible.

IDECO IDECO DIVISION, DRESSER EQUIPMENT COMPANY ONE OF THE DRESSER INDUSTRIES DALLAS U.S.A. TEXAS	DRAWN	CHECKED	APPROVED	SCALE
		JEH	WKT	
		10-4-54	10-4-54	
	DRAWING NUMBER 3-P129	SHEET NO. —	REV. NO. —	TOTAL SHEETS

IDECO WOODFIELD JUNIOR FULL VIEW MAST

LUBRICATION

Refer to lubrication drawing number 3-81001-43.

All lubrication should be carried out before the raising or lowering of the mast.

The tracks on which the raising legs slide, must be well greased manually before attempting to raise or lower the mast.

Grease all pins before insertion to mast.

Lubricators are provided at various positions, (see lub. chart). throughout the mast and must be greased every 24 hours, or every trip.

The fastline roller bushes are located on the back struts and should be greased every 24 hours with SHELL ALVANIA 3 grease.

Each bearing of the crown block is lubricated individually by grease nipples located in the end of the shaft. Use SHELL ALVANIA 3.

The following items are located at each side of the mast and are to be greased as stated above.

Raising leg pin.
Raising leg bearing.
Hinge pin.
Sheave bearing (mast raising line)
Sheave bearing (raising leg)
Latch pin.

Two sling line rollers are fitted to the mast, one on each of the two T1 sections. The bearings of the rollers must be OILED every 24 hours with an S.A.E. 30 oil.

Located near the head of the mast is the core line sheave and the catline sheave. Grease should be inserted into the bushes through lubricators provided every 24 hours.

All wire ropes should be inspected monthly and if it is found necessary, are to be dressed manually with ACID FREE OIL or GREASE such as SHELL CARDIUM 'D' FLUID, after first removing dirt with a wire bursh. Care must be taken not to destroy the internal lubricant contained in the core of the ropes.

General service lubricant - SHELL ALVANIA 3 or equivalent.

MATERIAL			
ITEM	ASS'Y MARK	QTY	DESCRIPTION
1	FM4-M59	2	TONG BUCKET ASSEMBLY
	81501-15		HANGER BRACKET INSTALLATION

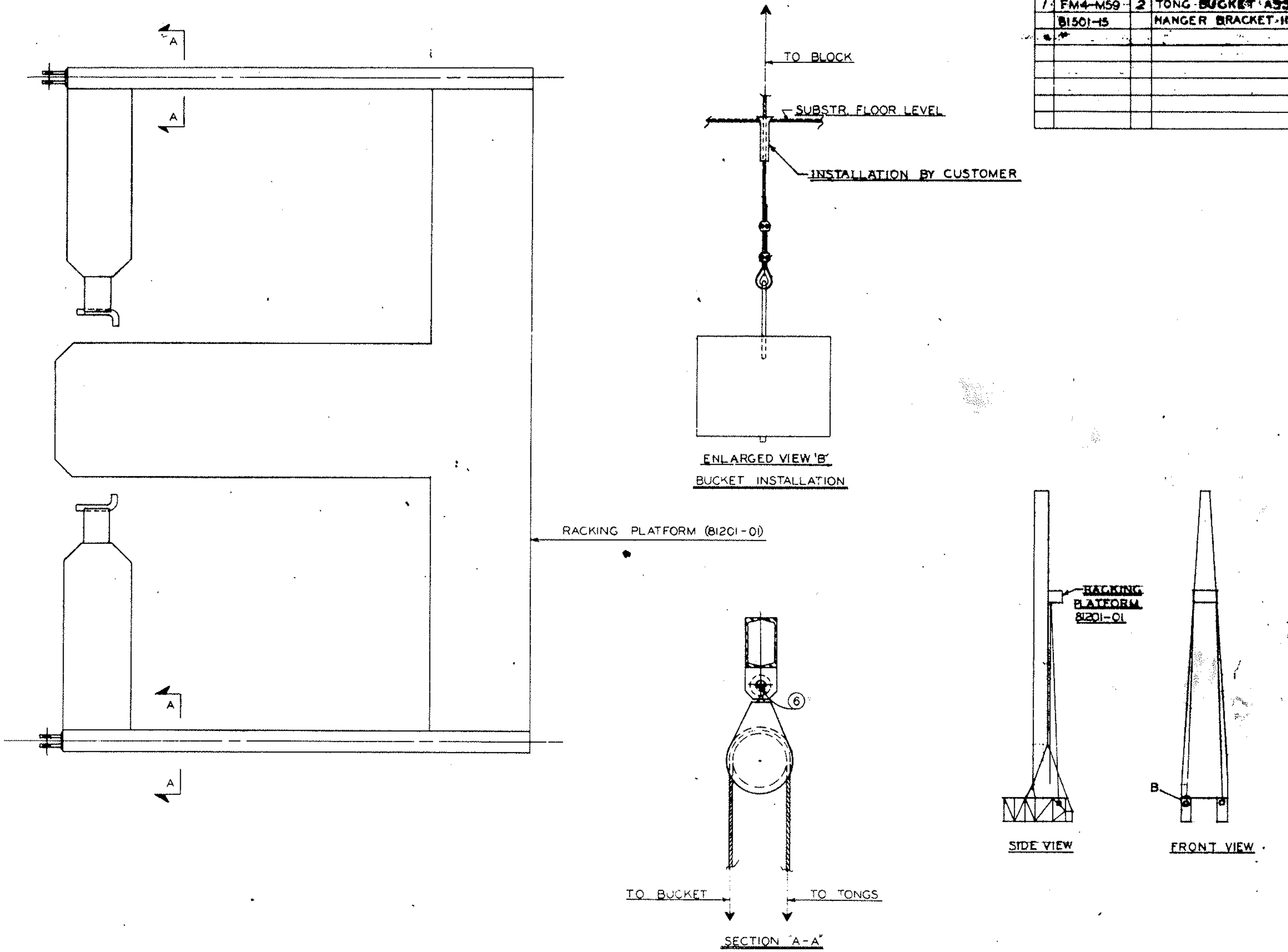

TOLERANCES	FINISH	
CASTINGS ± 1/8; FABRICATING ± 1/8; MACHINING FRACTIONAL ± 1/64; DECIMAL ± .005; UNLESS OTHERWISE NOTED	GENERAL TOUCHES SURFACE TO BE FINISHED; NUMBER = MICROINCH ROUGHNESS; MICROINCH ROUGHNESS IN ACCORDANCE WITH A. S. A. STANDARDS; SEE SHOP STANDARDS	This drawing, including all novel and patented or patentable subject matter, embodies confidential information of the Dresser Equipment Company - Ideco Division and is loaned with the understanding that it will not be reproduced nor be used for any purpose except that for which loaned unless written permission is granted by the owner, and that it shall be returned on demand.

IDECO

PLANT: BEAUMONT, TEXAS

HEADQUARTERS: DALLAS 21, TEXAS

INSTALLATION OF TONG COUNTERWEIGHTS

ORDER NO.

	DRAWN	CHECKED	APPROVED	SCALE
NAME	ACT	[illegible]	[illegible]	NONE
DATE	3-27-58	3-28-58	[illegible]	

DRAWING NO. 3-81501-16

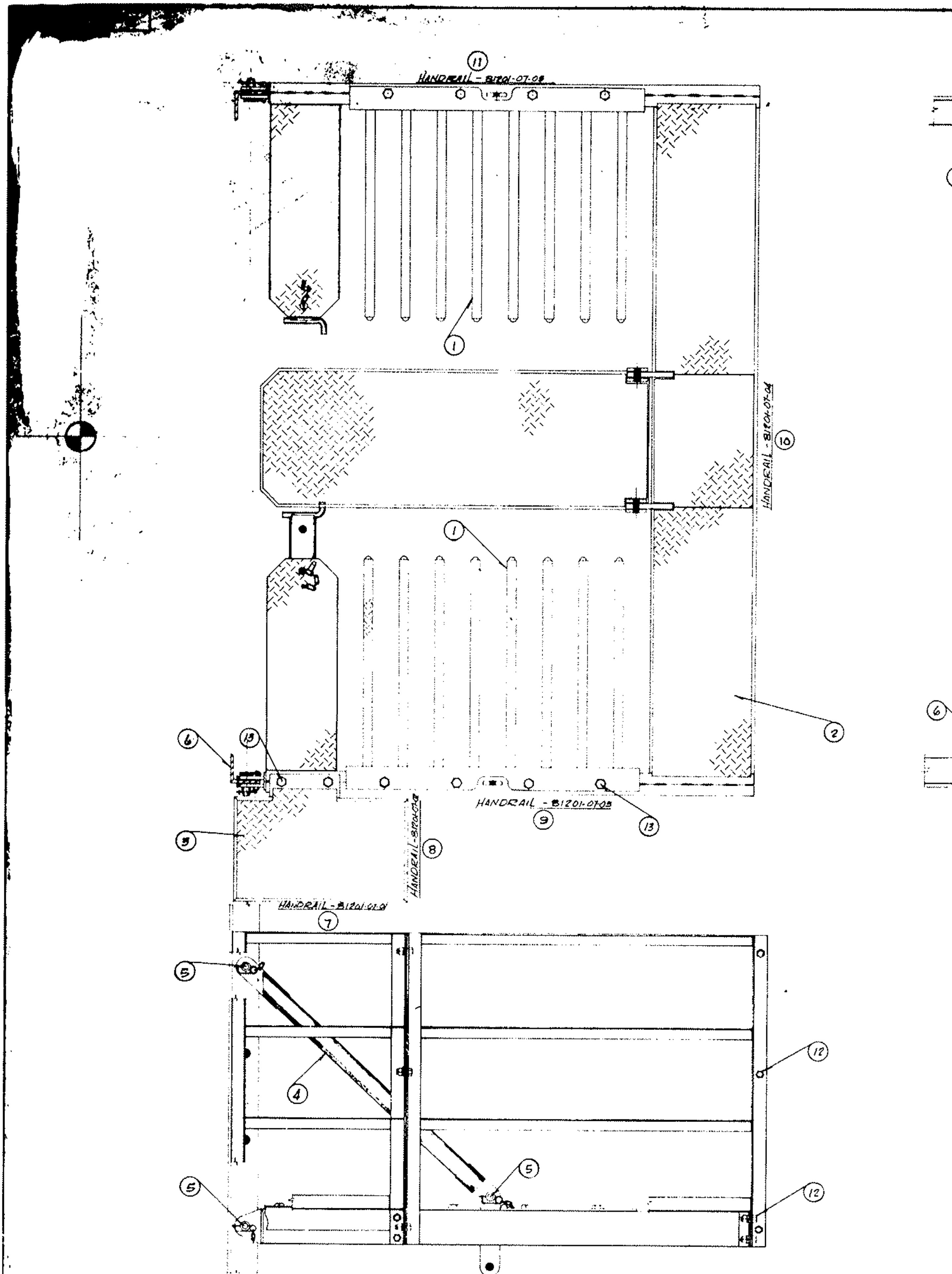

NOTES

TOLERANCES
[redacted]
MACHINING
FRACTIONAL ± 1/64
DECIMAL ± .005
UNLESS OTHERWISE NOTED

FINISH
SYMBOL TOUCHES SURFACE TO BE FINISHED
NUMBER = MICROINCH ROUGHNESS
MICROINCH ROUGHNESS IN ACCORDANCE WITH A.S.A. STANDARDS
SEE SHOP STANDARDS

NO. REQUIRED	FOR ASSEMBLY NO.	MODEL NO.
1		484152 FYM

REVISIONS

NO.	DESCRIPTION	DW	CK
1	[illegible]	[illegible]	
1a	[illegible]		
2	Added Sign	[illegible]	

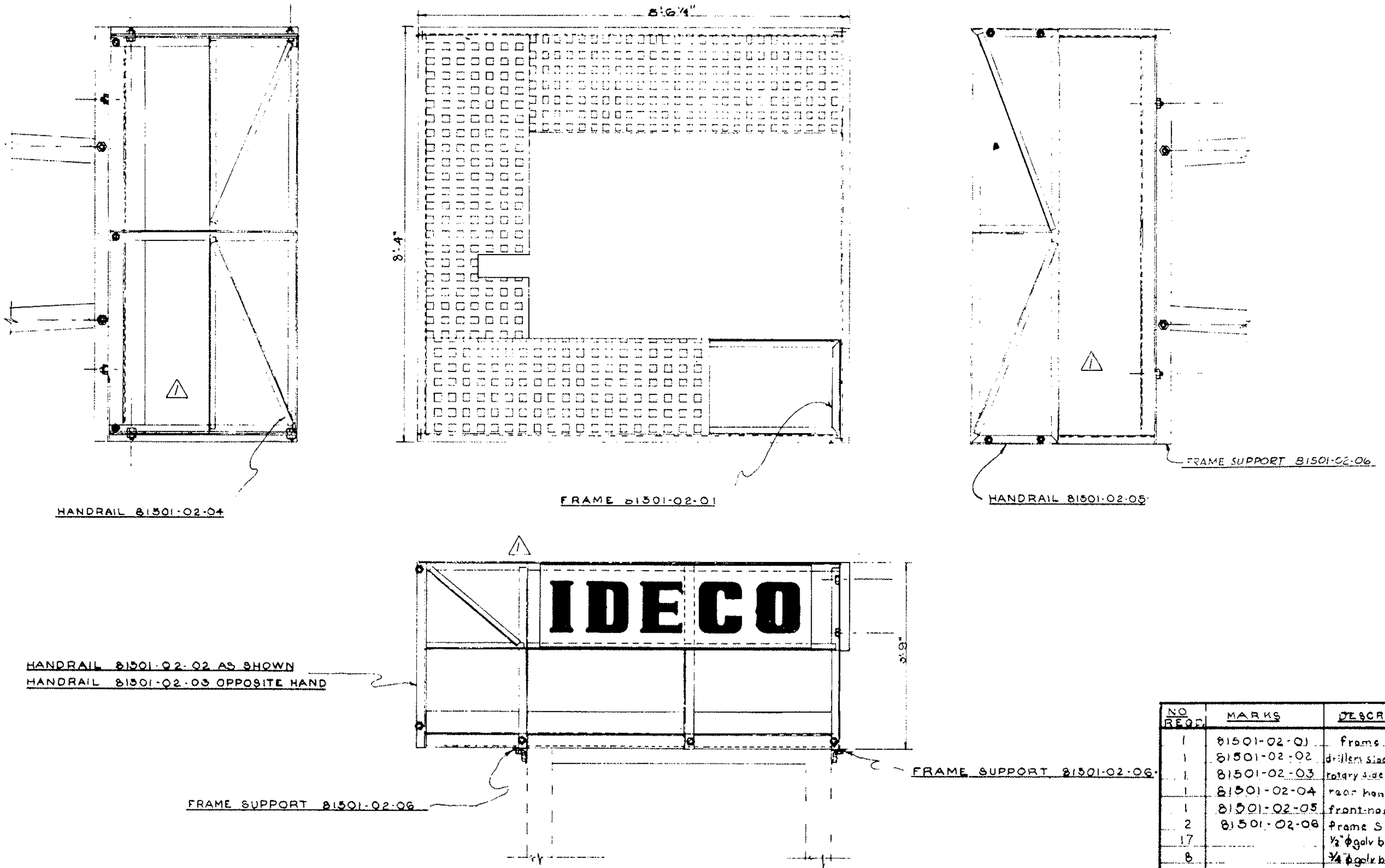

NO REQD.	MARKS	DESCRIPTION
1	81501-02-01	frame.
1	81501-02-02	drillers side handrail
1	81501-02-03	rotary side handrail
1	81501-02-04	rear handrail
1	81501-02-05	front handrail
2	81501-02-06	frame Support
17		1/2" φ galv bolts x 1 3/4"
8		3/4" φ galv bolts x 2 1/2"

REVISIONS

NO.	DESCRIPTION	DW.	CK.
1	REMOVED BRACES - CHANGED SIGN & POSITION	JWC	
2	REVISED HANDRAILS -02 & -03	[illegible]	

MODEL NO. / FOR ASSEMBLY NO. / NO. REQUIRED

NOTES:

TOLERANCES
CASTINGS ± 1/8
[redacted]
MACHINING
FRACTIONAL ± 1/64
DECIMAL ± .005
UNLESS OTHERWISE NOTED

FINISH
125 SYMBOL TOUCHES SURFACE TO BE FINISHED
NUMBER = MICROINCH ROUGHNESS
MICROINCH ROUGHNESS IN ACCORDANCE WITH A. S. A. STANDARDS
SEE SHOP STANDARDS

This drawing, including all novel and patented or patentable subject matter, embodies confidential information of the Dresser Equipment Company - Ideco Division and is loaned with the understanding that it will not be reproduced nor be used for any purpose except that for which loaned unless written permission is granted by the owner, and that it shall be returned on demand.

IDECO
DRESSER EQUIPMENT CO. - IDECO DIVISION

PLANT: BEAUMONT, TEXAS
HEADQUARTERS: DALLAS 21, TEXAS

CROWS NEST ASSEMBLY DRAWING FOR FM98'-300 & 132'-300

ORDER NO.				
	DRAWN	CHECKED	APPROVED	SCALE
NAME	[illegible]	JMH		
DATE	[illegible]	2-13-57		
DRAWING NO.	3-81501-01		REVISION NO.	II

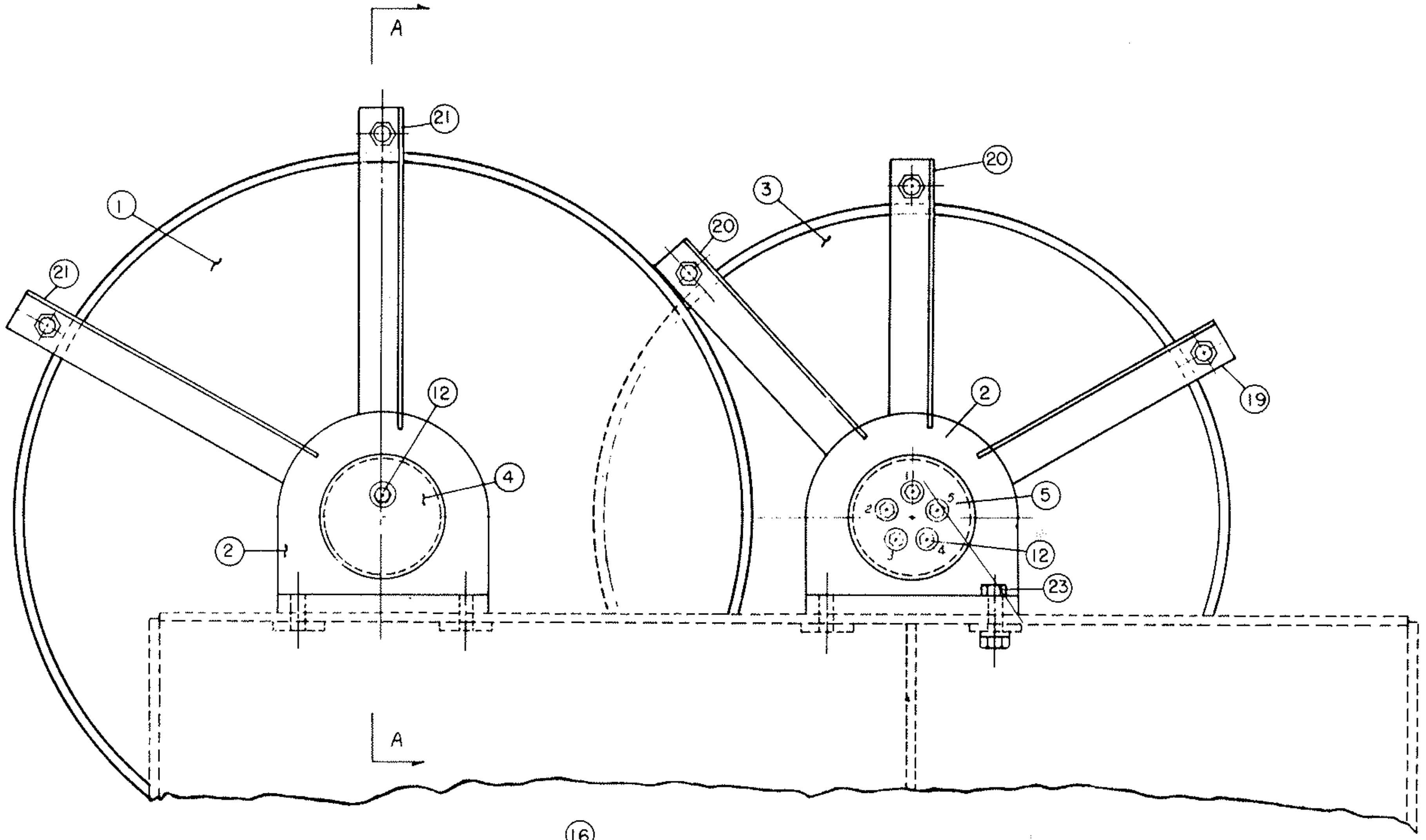

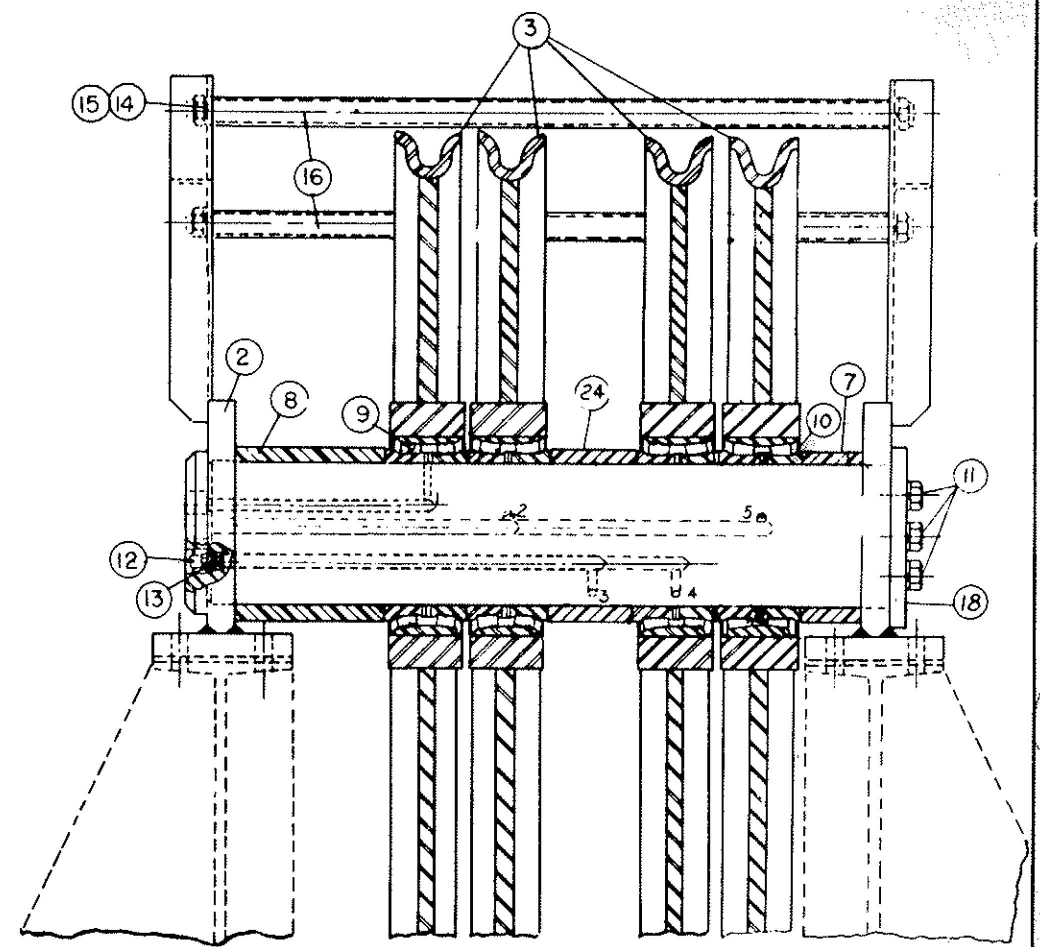

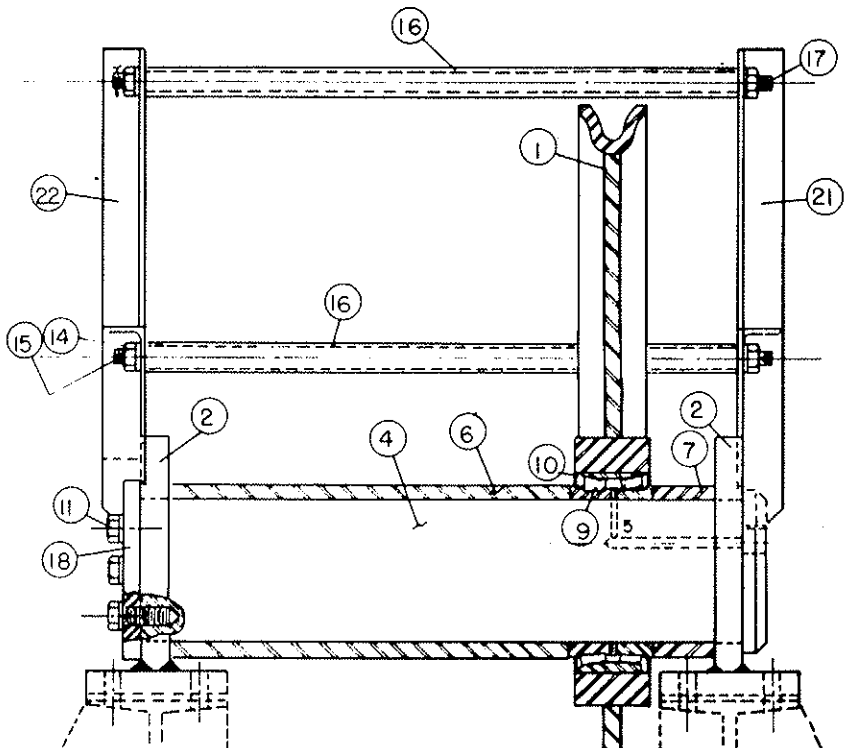

VIEW A-A

⚠ * FOR OPTIONAL GROOVE SIZES, THE FOLLOWING SHEAVES WILL BE USED

PART NO.	DESCRIPTION	DWG. NO.
BMT 1254-31	42" FABRIFORM SHEAVE - 1" W.L.	BMT 1254-B
BMT 1254-59	42" FABRIFORM SHEAVE - 1⅛" W.L.	BMT 1254-B
BMT 1254-29	36" FABRIFORM SHEAVE - 1" W.L.	BMT 1254-B
BMT 1254-33	36" FABRIFORM SHEAVE - 1⅛" W.L.	BMT 1254-B

BILL OF MATERIAL

	PART NO.	DESCRIPTION	DWG. NO.	REQ'D.
1	*BMT 1254-32	42" FABRIFORM SHEAVE - 1⅛" W.L.	BMT 1254-B	1
2	81101-02	DEAD EYE	1-81101-02	4
3	*BMT 1254-30	36" FABRIFORM SHEAVE - 1⅛" W.L.	BMT 1254-B	4
4	81101-16	FASTLINE SHAFT	2-81101-16	1
5	81101-15	WORKING SHAFT	2-81101-15	1
6	81101-20	SPACER	1-81101-20	1
7	81101-06	SPACER	1-81101-06	2
8	81101-07	SPACER	1-81101-07	1
9	1B-226	BEARING - TIMKEN		5
10	10413-4A	GREASE SEAL	2-10413-4A	10
11		⅜" N.C. CP.S. GALV. × 2" LONG W/L.W.		8
12	1F-100	⅛" ALEMITE GREASE FITTING		6
13		⅛" × ⅜" PIPE BUSHING		6
14		⅜" N.C. NUT & L.W.		10
15		⅛" × 1½" COTTER PIN		10
16	81101-18	GUARD PIPES	1-81101-18	5
17	81101-17	GUARD BOLT GALV.	1-81101-17	5
18	81101-10	CAP PLATE	1-81101-10	2
19	81101-11-02	GUARD SUPPORT	1-81101-11	3
20	81101-11-01	GUARD SUPPORT	1-81101-11	3
21	81101-12-01	GUARD SUPPORT	1-81101-12	2
22	81101-12-02	GUARD SUPPORT	1-81101-12	2
23		1" N.C. CAP S. GALV. 3½" LG. W/NUT & L.W.		16
24	81101-19	SPACER	1-81101-19	1

NOTE: FOR OPTIONAL 6TH SHEAVE REPLACE SPACER # 24 W THE FOLLOWING MATERIAL:

*BMT 1254-30	36" FABRIFORM SHEAVE - 1⅛" W.L.	BMT 1254-B	1
1B-226	BEARING - TIMKEN		1
10413-4A	GREASE SEAL	2-10413-4A	2

TOLERANCES: CASTINGS ± 1/8, FABRICATING ± 1/8, MACHINING FRACTIONAL ± 1/64, DECIMAL ± .005 UNLESS OTHERWISE NOTED

FINISH: 125 SYMBOL TOUCHES SURFACE TO BE FINISHED. NUMBER = MICROINCH ROUGHNESS. MICROINCH ROUGHNESS IN ACCORD ANCE WITH A.S.A. STANDARDS. SEE SHOP STANDARDS

NO.	DESCRIPTION	BY
1	ADDED CHART FOR WIRE LINE SIZES	RCM

This drawing, including all novel and patentable subject matter, embodies confidential information of the Dresser Equipment Company, Ideco Division and is loaned with the understanding that it will not be reproduced nor be used for any purpose except that for which loaned unless written permission is granted by the owner, and that it shall be returned on demand.

IDECO

DRESSER EQUIPMENT CO. · IDECO DIVISION

PLANT BEAUMONT TEXAS

HEADQUARTERS DALLAS 21, TEXAS

CROWN BLOCK ASSEMBLY
JUNIOR FULL VIEW MAST

ORDER NO.

	DRAWN	CHECKED	APPROVED	SCALE
NAME	RCM	JSE		
DATE	11-20-57	11-20-57		

DRAWING NO. 4-81101-13 — 1

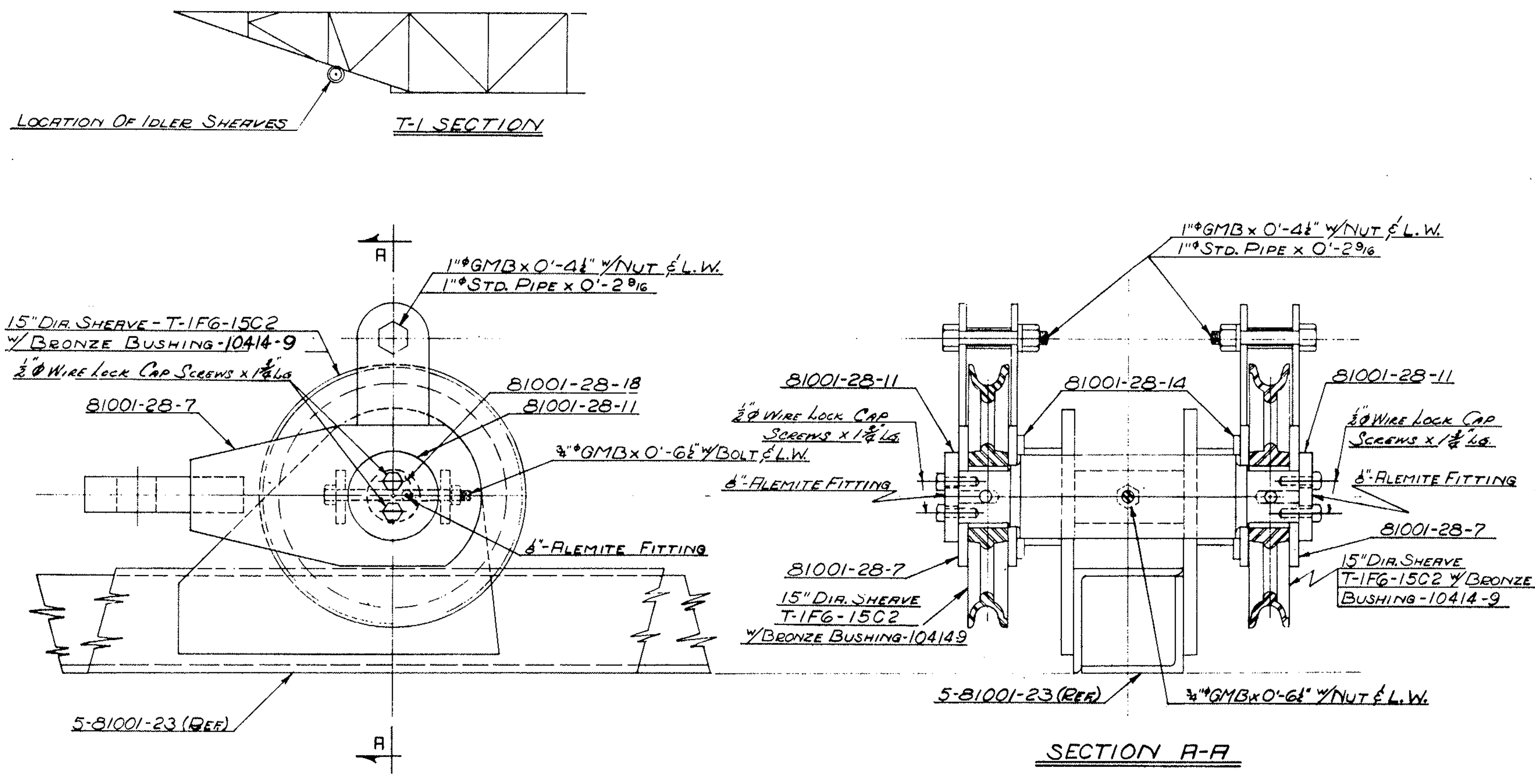

NOTES:

REVISIONS | NO. | DESCRIPTION | DW. | CK.

MODEL NO. | FOR ASSEMBLY NO. | NO. REQUIRED

TOLERANCES
[redacted]
MACHINING
FRACTIONAL ± 1/64
DECIMAL ± .005
UNLESS OTHERWISE NOTED

FINISH
SYMBOL TOUCHES SURFACE TO BE FINISHED
NUMBER = MICROINCH ROUGHNESS
MICROINCH ROUGHNESS IN ACCORDANCE WITH A. S. A. STANDARDS
SEE SHOP STANDARDS

This drawing, including all novel and patented or patentable subject matter, embodies confidential information of the Dresser Equipment Company - Ideco Division and is loaned with the understanding that it will not be reproduced nor be used for any purpose except that for which loaned unless written permission is granted by the owner, and that it shall be returned on demand.

IDECO
DRESSER EQUIPMENT CO. - IDECO DIVISION

PLANT: BEAUMONT, TEXAS
HEADQUARTERS: DALLAS 21, TEXAS

ASSEMBLY DWG. OF - IDLER SHEAVE FOR 132' FVM

ORDER NO.	DRAWN	CHECKED	APPROVED	SCALE
NAME	[signature]			
DATE	2-15-57			

DRAWING NO. 3-81001-54 REVISION NO. I

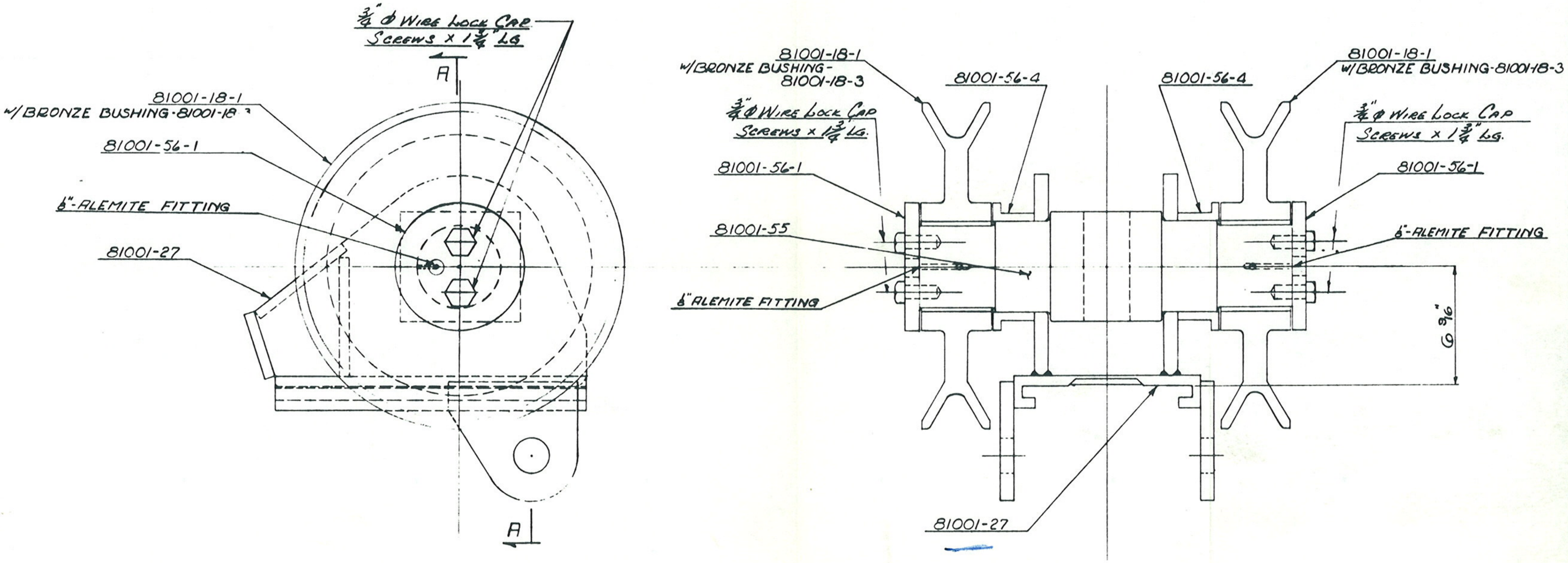

SECTION A-A

(8)

NO.	DESCRIPTION	DW.	CK.

REVISIONS

MODEL NO.

FOR ASSEMBLY NO.

NO. REQUIRED

NOTES:

TOLERANCES
[redacted]
MACHINING
FRACTIONAL ± 1/64
DECIMAL ± .005
UNLESS OTHERWISE NOTED

FINISH
125 SYMBOL TOUCHES SURFACE TO BE FINISHED
NUMBER = MICROINCH ROUGHNESS
MICROINCH ROUGHNESS IN ACCORDANCE WITH A. S. A. STANDARDS
SEE SHOP STANDARDS

This drawing, including all novel and patented or patentable subject matter, embodies confidential information of the Dresser Equipment Company - Ideco Division and is loaned with the understanding that it will not be reproduced nor be used for any purpose except that for which loaned unless written permission is granted by the owner, and that it shall be returned on demand.

IDECO
DRESSER EQUIPMENT CO. - IDECO DIVISION

PLANT: BEAUMONT, TEXAS
HEADQUARTERS: DALLAS 21, TEXAS

ASSEMBLY DRAWING OF RAISING LEG SHOE 132' FULL VIEW MAST

ORDER NO.

	DRAWN	CHECKED	APPROVED	SCALE
NAME	BALDWIN			3"=1'-0
DATE	2-11-57			REVISION NO.

DRAWING NO. 3-81001-57

K-E ALBANENE 100L © TRACING PAPER 10300

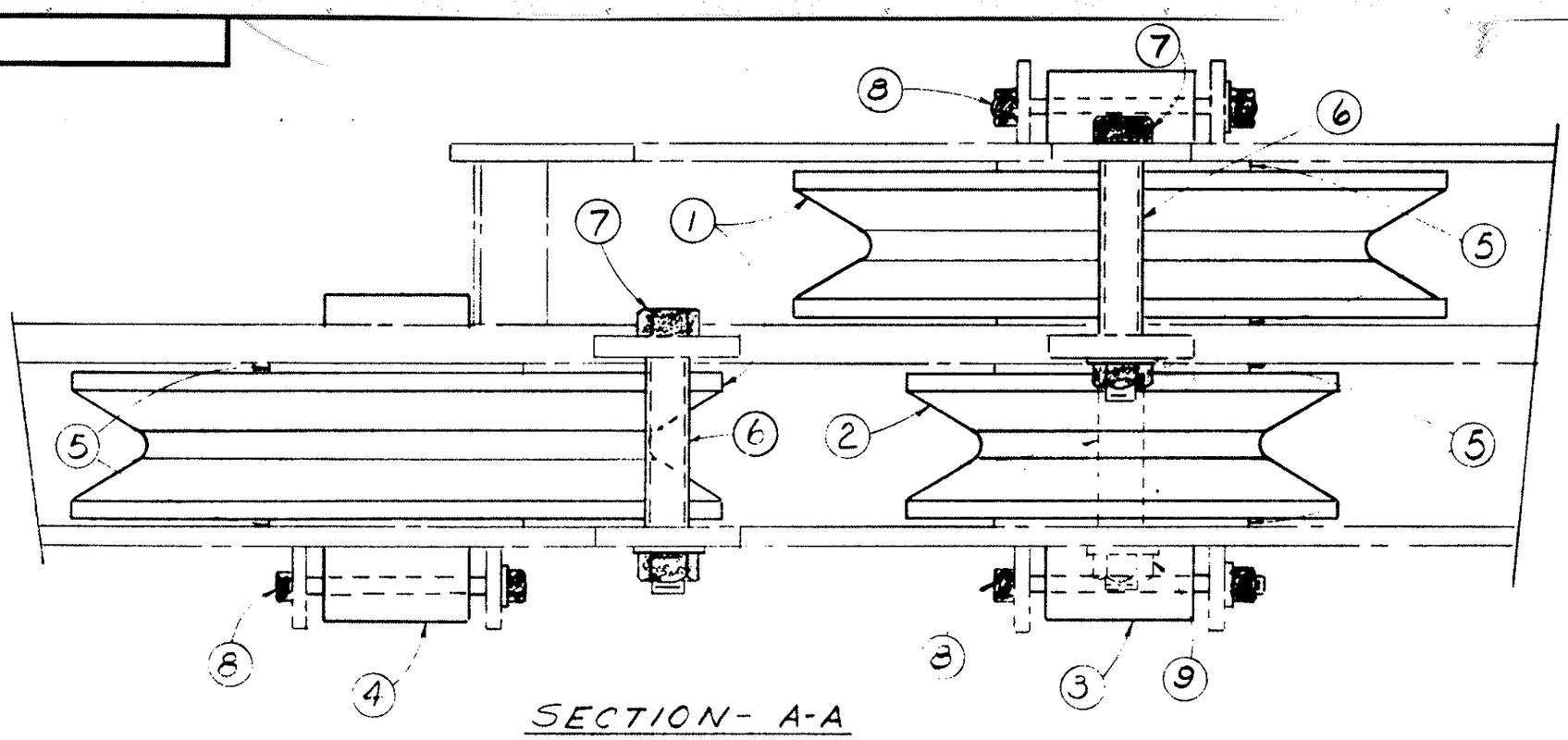

SECTION- A-A

* BILL OF MATERIAL

ITEM	SHIP. MK.	QUAN.	DESCRIPTION
1	81001-18-01	4	18"Φ SHEAVE
2	81001-19-01	2	12"Φ SHEAVE
3	81001-20-01	2	4"Φ SHAFT
4	81001-20-02	2	4"Φ SHAFT
5	81001-19-02	12	BRONZE
			THRUST WASH
6	81001-21-10	10	LINE GUARD
7		8	1"Φ×7"LG. G.
			w/ H.N. & L. W.
8		6	3/4"Φ×7"LG. G.
			w/ H.N. & L.W.
9		2	1"Φ×6"LG. G.
			w/ H.N. & L. W.

* FOR ONE COMPLETE MAS

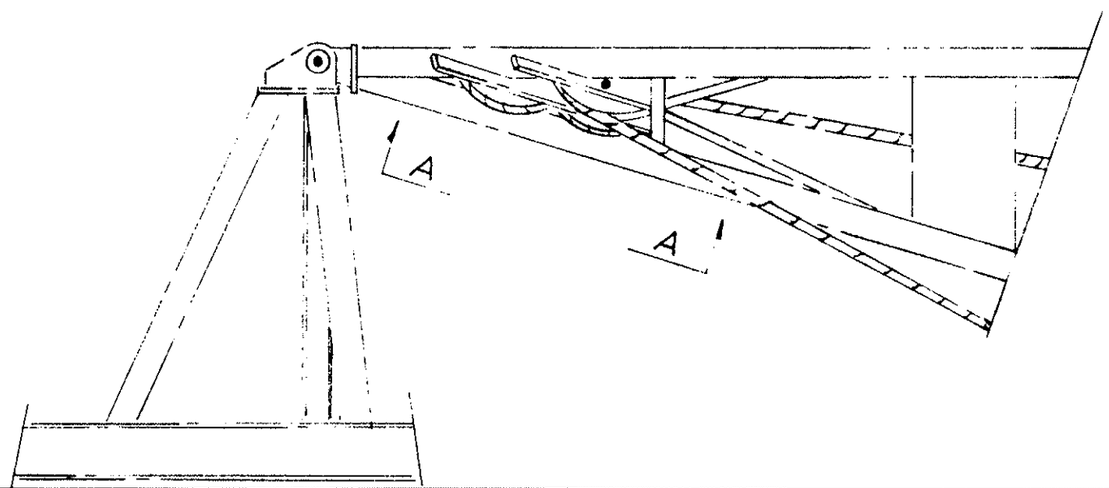

VISIONS

TOLERANCES

ACHINING
RACTIONAL ± 1/64
DECIMAL ± .005
NLESS OTHERWISE NOTED

FINISH

125 SYMBOL TOUCHES SURFACE TO BE FINISHED

NUMBER — MICROINCH ROUGHNESS

MICROINCH ROUGHNESS IN ACCORDANCE WITH A. S. A. STANDARDS

SEE SHOP STANDARDS

This drawing, including all novel and patented or patentable subject matter, embodies confidential information of the Dresser Equipment Company - Ideco Division and is loaned with the understanding that it will not be reproduced nor be used for any purpose except that for which loaned unless written permission is granted by the owner, and that it shall be returned on demand.

IDECO

DRESSER EQUIPMENT CO. - IDECO DIVISION
PLANT: BEAUMONT, TEXAS
HEADQUARTERS: DALLAS 21, TEXAS

ASSEMBLY OF MAST RAISING SHEAVES FOR 98' & 132' JR. F.V.

ORDER NO.				
	DRAWN	CHECKED	APPROVED	SC
NAME	GEF	[illegible]		
DATE	11-19-57	11-20-57		
DRAWING NO.	2-81001-59			REVIS

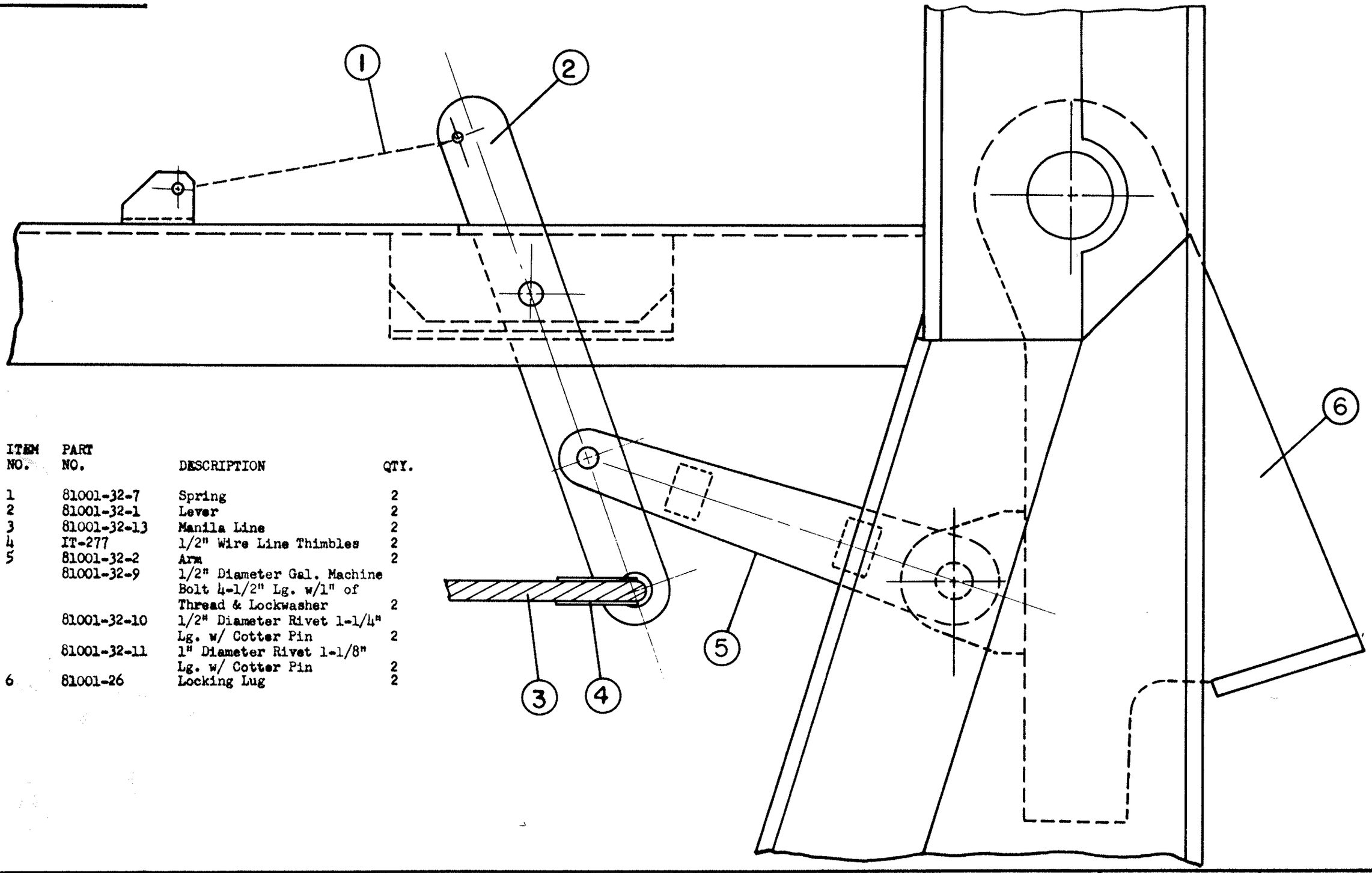

ITEM NO.	PART NO.	DESCRIPTION	QTY.
1	81001-32-7	Spring	2
2	81001-32-1	Lever	2
3	81001-32-13	Manila Line	2
4	IT-277	1/2" Wire Line Thimbles	2
5	81001-32-2	Arm	2
	81001-32-9	1/2" Diameter Gal. Machine Bolt 4-1/2" Lg. w/1" of Thread & Lockwasher	2
	81001-32-10	1/2" Diameter Rivet 1-1/4" Lg. w/ Cotter Pin	2
	81001-32-11	1" Diameter Rivet 1-1/8" Lg. w/ Cotter Pin	2
6	81001-26	Locking Lug	2

IONS

ERANCES
CTURAL ITEMS
ACTIONAL ± 1/16
HINERY ITEMS
CASTINGS ± 1/8
ACTIONAL ± 1/64
DECIMAL ± .005
SS OTHERWISE NOTED

FINISH
125 SYMBOL TOUCHES SURFACE TO BE FINISHED
NUMBER — MICROINCH ROUGHNESS
MICROINCH ROUGHNESS IN ACCORDANCE WITH A. S. A. STANDARDS
SEE SHOP STANDARDS

This drawing, including all novel and patented or patentable subject matter, embodies confidential information of the Dresser Equipment Company - Ideco Division and is loaned with the understanding that it will not be reproduced nor be used for any purpose except that for which loaned unless written permission is granted by the owner, and that it shall be returned on demand.

IDECO

PLANT: BEAUMONT, TEXAS
HEADQUARTERS: DALLAS 21, TEXAS

LOCKING MECHANISM FOR 98' AND 132' JFV MAST

ORDER NO.				
	DRAWN	CHECKED	APPROVED	SC
NAME	[illegible]	GAC	JSE	
DATE	11-17-59	11-17-59	11-17-59	
DRAWING NO.	2-81001-61			REVIS

ENE 1961 C4080